High Power Capacitors

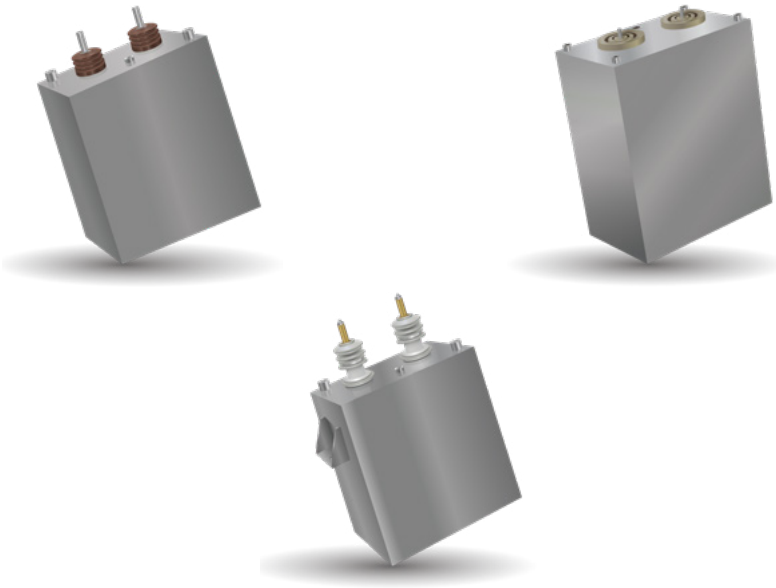

081622

IMPORTANT INFORMATION/DISCLAIMER

All product specifications, statements, information and data (collectively, the "Information") in this datasheet or made available on the website are subject to change. The customer is responsible for checking and verifying the extent to which the Information contained in this publication is applicable to an order at the time the order is placed. All Information given herein is believed to be accurate and reliable, but it is presented without guarantee, warranty, or responsibility of any kind, expressed or implied.

Statements of suitability for certain applications are based on KYOCERA AVX's knowledge of typical operating conditions for such applications, but are not intended to constitute and KYOCERA AVX specifically disclaims any warranty concerning suitability for a specific customer application or use.

ANY USE OF PRODUCT OUTSIDE OF SPECIFICATIONS OR ANY STORAGE OR INSTALLATION INCONSISTENT WITH PRODUCT GUIDANCE VOIDS ANY WARRANTY.

The Information is intended for use only by customers who have the requisite experience and capability to determine the correct products for their application. Any technical advice inferred from this Information or otherwise provided by KYOCERA AVX with reference to the use of KYOCERA AVX's products is given without regard, and KYOCERA AVX assumes no obligation or liability for the advice given or results obtained.

Although KYOCERA AVX designs and manufactures its products to the most stringent quality and safety standards, given the current state of the art, isolated component failures may still occur. Accordingly, customer applications which require a high degree of reliability or safety should employ suitable designs or other safeguards (such as installation of protective circuitry or redundancies) in order to ensure that the failure of an electrical component does not result in a risk of personal injury or property damage.

Unless specifically agreed to in writing, KYOCERA AVX has not tested or certified its products, services or deliverables for use in high risk applications including medical life support, medical device, direct physical patient contact, water treatment, nuclear facilities, weapon systems, mass and air transportation control, flammable environments, or any other potentially life critical uses. Customer understands and agrees that KYOCERA AVX makes no assurances that the products, services or deliverables are suitable for any high-risk uses. Under no circumstances does KYOCERA AVX warrant or guarantee suitability for any customer design or manufacturing process.

Although all product–related warnings, cautions and notes must be observed, the customer should not assume that all safety measures are indicted or that other measures may not be required.

HIGH POWER CAPACITORS

Table of Contents

TPC (acquired by KYOCERA AVX Corporation in 1998) is at the forefront of high performance film capacitor technology improvements for 40 years.

In 1979, we developed **CONTROLLED SELF HEALING** Technology specifically to enhance the performance of power film capacitors.

This enables the capacitor to continue to operate without catastrophic failure by insulating the weak points of the dielectric material. During operation, the capacitor behaves like a battery. It consumes capacitance via the gradual breakdown of the individual cells until a 2% decrease from the original value.

Since 1990, **FIM** Technology launching year, we continuously improve the performances to meet DC filtering power applications.

FIM Technology with polypropylene **F**ilm, vegetable oil **I**mpregnated and aluminium **M**etallization combines totally safe behaviour and high energy density.

FIM Technology is available in TRAFIM and FILFIM ranges for DC filtering applications.

Also available in DISFIM range for energy storage and discharge applications.

FIM RANGES OVERVIEW

TRAFIM	
	110µF to 10600µF 1950V to 6000V Up to 495J/l for 100khours lifetime at 70°C hot spot temp Maximum hot spot temperature 95°C High RMS current capability Low inductance design Stainless steel hermetic case DC link or resonant filtering for traction and industrial applications Available on customized design as well
FILFIM	
	2.6µF to 612µF 6500V to 56000V Up to 250J/l for 100khours lifetime at 70°C Stainless steel hermetic case High voltage DC filtering for industrial and research applications Available on customized design as well
DISFIM	
	Only available on customized design Up to 40mF Up to 100kV Up to 2000J/l for short lifetime (shots) Stainless steel hermetic case Discharge applications for industrial and research applications Integration in frames or cabinets available

TANGENT OF LOSS ANGLE VS FREQUENCY

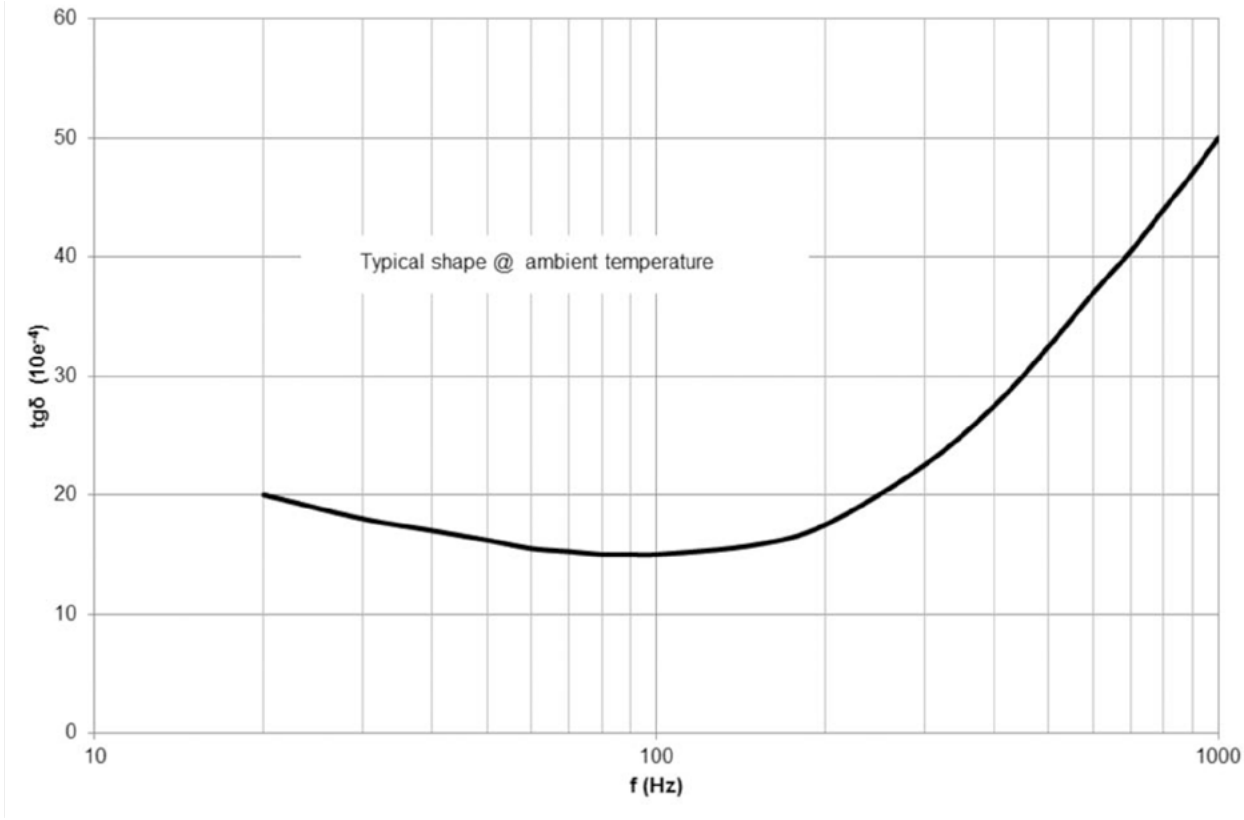

TANGENT OF LOSS ANGLE VS TEMPERATURE

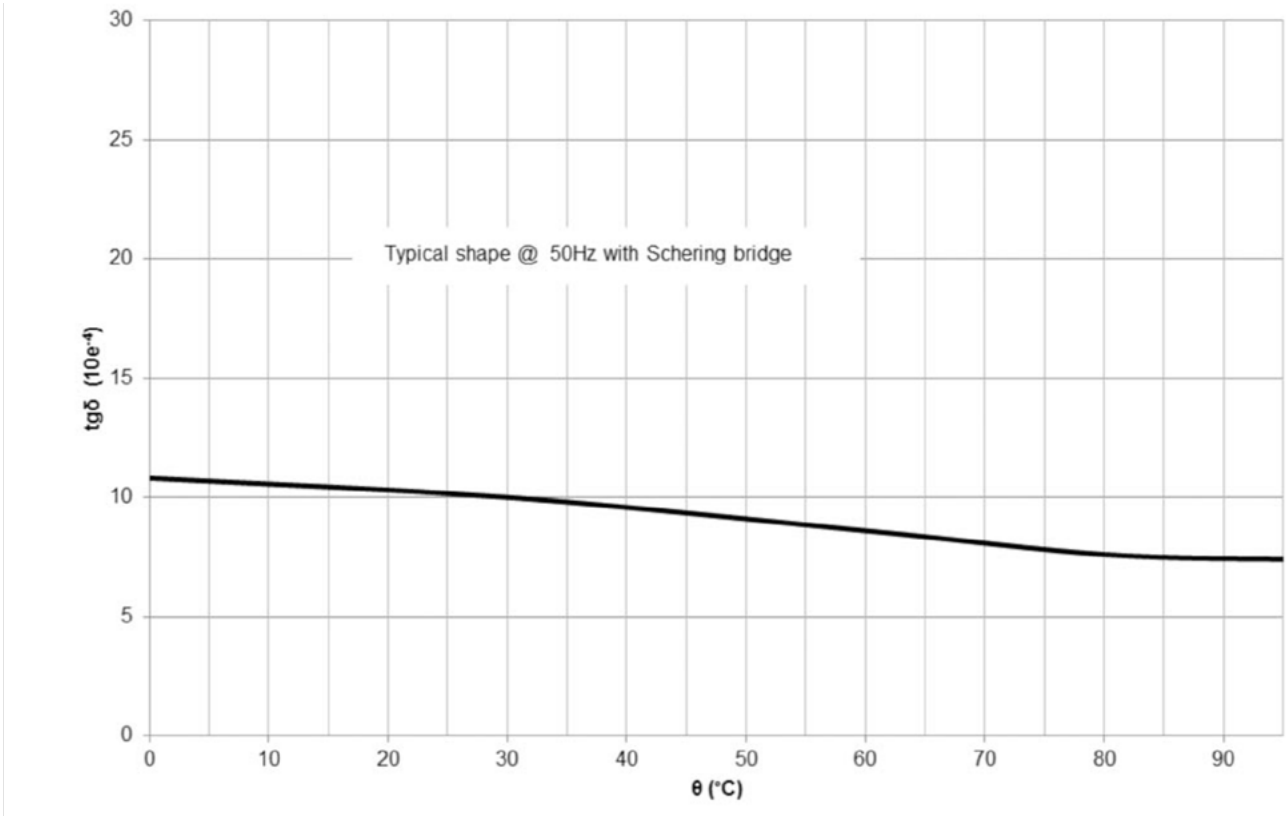

ΔC/C VS HOT SPOT TEMPERATURE

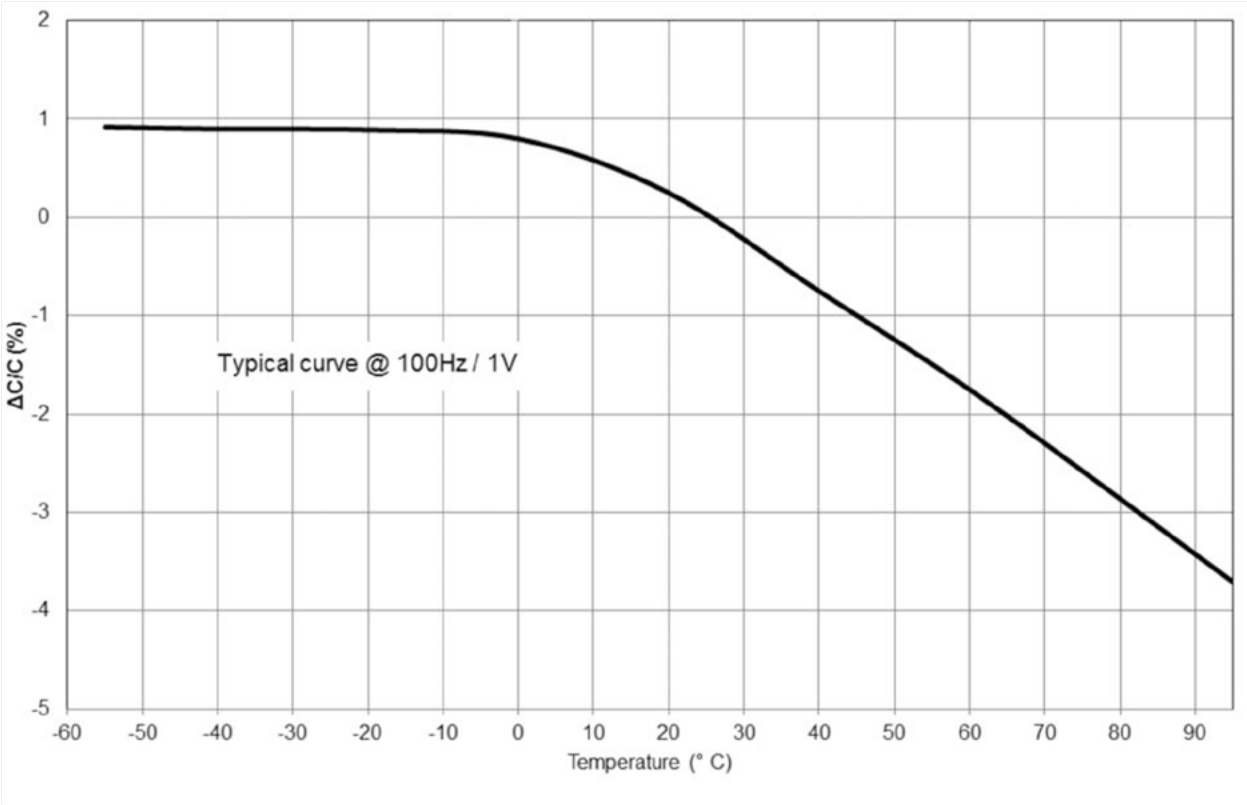

DIMENSIONS

Dimensions and weights are indicated in the tables of values. Dimensional tolerances are:

H±3mm, W±3mm

Initially, the large faces of the capacitor may be slightly convex.

At delivery, the maximum width

(Wmax) is W + 15mm

Standard material is stainless steel. Aluminium is available for specific requirement to reduce the weight or induction effect.

HANDLING

When unpacking, make sure that no mechanical shocks, that might deform the cans or damage the terminals, occur.

The capacitors have to be handled by using the nuts HmM10 (eyebolt) or the brackets.

In no case, the electrical output terminals must be used to lift the capacitor.

The grounding wire should be kept in place until the mounting of the capacitor.

ASSEMBLY AND INSTALLATION

Check the absence of excessive mechanical stresses

The mechanical stresses in assembly should remain compatible with the characteristics of the capacitor. The method of mounting should not lead to the deformation of the capacitor case.

Comply with the maximum tightening torques stipulated for the terminals.

Mechanical mounting

Vertical mounting is preferred and horizontal is acceptable. Please contact KYOCERA AVX for upside down mounting configuration.

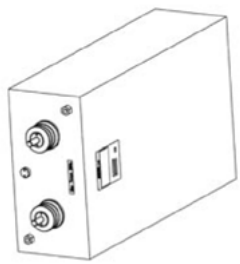	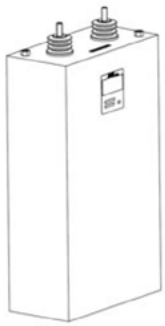		
Preferred	**Preferred**	**Acceptable**	**On specific request**

In order to enable air convection, it is necessary to maintain at least 40mm between the large faces of the capacitor.

Connections

They should not induce any constraint on the output terminals. Flexible connections should be used (braided in thin metal). The cross section should not be less than: **$S=0.2 \times I_{max}$ $S(mm^2)$ and I_{max} (A)**
The skin effect, which occurs vs frequency, must also be considered.

MARKING

The label is usually located 50mm from the top of the case and centred to the length.

Informations:

KYOCERA AVX/TPC logo
Part Number
Capacitance and tolerance
Nominal voltage
Test voltage between terminals and case
Batch and serial number
Date of manufacturing

SAFETY

The **FIM** technology provides excellent safety. There is no risk of explosion in case of defect throughout the life of the capacitor. This explains why there is no need to equip these capacitors with pressure switch.

Rapeseed oil is not explosive or flammable at normal conditions, therefore capacitors can be transported without being subjected to safety rules. Rapeseed oil flash point is about 317°C and the polypropylene flash point is 350°C leading to a temperature of security above 317°C.

In case of fire above this temperature, it is recommended to use powder or CO_2. The use of water is contra-indicated. The possible rejected products during fire are mainly hydrocarbons in case of non-complete combustion, H_2O, CO_2 and CO otherwise. Carrying mask is required for protection.

OIL

The only impregnant used in **FIM** capacitors is rapeseed oil (otherwise known as Canola oil) and then it is fully environmentally compatible.

Of all the vegetable oils, rapeseed oil has one of the best thermal stability.

NON-TOXIC COMPOSITION

Our capacitors are free of:
Arsenic, Asbestos, Beryllium, Brominated flame retardants (PBB and PBDE), Cadmium, CFC, HCFC, Cobalt, Formaldehyde, Halon, Isocyanatos, Mercury, Nickel, PCB, PCT, Polyaromatic, Hydrocarbons (PAH), Phtalates, PVC, PTFE and Thirams.

Lead is only found in soldering (for approximatively 0.3% of the capacitor weight).

Free of SF6.

CAPACITORS DISPOSAL

The disposal of the capacitors is subjected to the laws in force in each country.
In practice, today, please contact KYOCERA AVX for a list of companies who can take charge of the products to be destroyed.

TRAFIM PRODUCTS

1950Vdc to 6000Vdc

GENERAL DESCRIPTION

The TRAFIM series is specifically designed for DC filtering applications such as DC link or resonant filters for voltages up to 6000V.

Large case sizes up to 46 liters and high specific energy up to 495J/l* together with safe and reliable ***Controlled Self Healing Technology*** make this series particularly suitable for power converters in traction, drives, renewable energy and power transmission areas.
*for 100,000 hours and 70°C hot spot temperature

The ***Controlled Self Healing Technology*** is based on a high temperature grade metallized film impregnated with vegetable oil allowing operating temperature up to 95°C.

Standard designs proposed in this catalogue are covering a wide range of voltage and capacitance values.

In case of specific requirements about shape and performances, feel free to contact your local KYOCERA AVX representative.

PACKAGING MATERIAL

Not painted rectangular nonmagnetic stainless steel hermetic case
With or without mounting brackets
Grounding through a nut on the top of the case
M10/17 female terminals or M12/30 male terminals
2 or 4 waves terminals
2 or 4 terminals
Self-extinguishing thermosetting terminal body (certified classifications according to EN 45545-2)

STANDARDS

IEC 61071:	Power electronic capacitors
IEC 61881:	Railway applications, rolling stock equipment, capacitors for power electronics
IEC 61373:	Railways application, rolling stock equipment, shock and vibration tests
IEC 60068-2:	Environmental testing. Part 2: Tests
EN 45545:	Railways applications – Fire protection on railway vehicles Part 2: Requirements for fire behavior of materials and components Part 5: Fire safety requirements for electrical equipment including that of trolley buses, track guided buses and magnetic levitation vehicles

HOW TO ORDER

DK	TFM	1	1	M	B	1347
	Series	**Section and Option**	**Terminals Type**	**Fixing**	**Voltage**	**Capacitance EIA code**
		1 = 340x117 2 Terminals 2 = 340x117 4 Terminals 3 = 340x165 2 Terminals 4 = 340x165 4 Terminals	1, 2, 3 or 4 See drawings	W = without M = brackets	B = 1950V C = 2150V D = 2350V E = 2600V F = 2900V G = 3150V H = 3750V I = 4200V J = 4700V K = 5200V L = 5800V M = 6000V	

DEFINITIONS

C_n (µF)	capacitance	nominal value of the capacitance measured at θ_{amb} = 25°C ± 10°C
U_n (V)	rated DC voltage	maximum operating peak voltage of either polarity (non-reversing type waveform), for which the capacitor has been designed for continuous operation
U_w (V)	working voltage	value of the maximum operating recurrent voltage for a given hot spot temperature and an expected lifetime
U_r (V)	ripple voltage	peak-to-peak alternating component of the unidirectional voltage
L_s (nH)	parasitic inductance	capacitor series self-inductance
R_s (mΩ)	series resistance	capacitor series resistance due to galvanic circuit @ amb temperature
I_{rms} thermal 1 (A)	RMS current	rms current value @ 100Hz for continuous operation under confined area generating 20°C overheating (255Arms maximum for 2 terminals and 400Arms maximum for 4 terminals)
I_{rms} thermal 2 (A)	RMS current	rms current value @ 100Hz for continuous operation under natural convection generating 20°C overheating (255 Arms maximum for 2 terminals and 400Arms maximum for 4 terminals)
I_{rms} thermal 3 (A)	RMS current	rms current value @ 100Hz for continuous operation under forced air generating 20°C overheating (255Arms maximum for 2 terminals and 400Arms maximum for 4 terminals)
θ_{amb} (°C)	cooling air temperature	temperature of the cooling air measured at the hottest position of the capacitor, under steady-state conditions, midway between two units (NOTE If only one unit is involved, it is the temperature measured at a point approximately 0.1 m away from the capacitor container and at two-thirds of the height from its base)
θ_{HS} (°C)	hot spot temperature	highest temperature obtained inside the case of the capacitor in thermal equilibrium

CHARACTERISTICS

Capacitance range C_n	110µF to 10600µF
Tolerance on C_n	±10%
Rated DC voltage U_n	1950 to 6000V
Lifetime at U_n and 80°C hot-spot temperature and ΔC / C < 2%	100,000h
Parasitic inductance L_s	24nH to 149nH
Maximum rms current Irms	up to 400A_{rms}
Test voltage between terminals @ 25°C	1.5 x Un for 10s
Test voltage between terminals and Case @ 25°C	(2 x Un +1000)V_{rms} @ 50Hz for 10s
Dielectric Film	Polypropylene
Dielectric Liquid Filling	Rape seed oil
Climatic Category	55 / 95 / 56 (IEC 60068)
Working temperature	-55°C / +95°C (according to the power dissipated)
Storage temperature	-55°C / +95°C
Calorific value	30 MJ/kg

LIFETIME EXPECTANCY VS HOT SPOT TEMPERATURE AND VOLTAGE

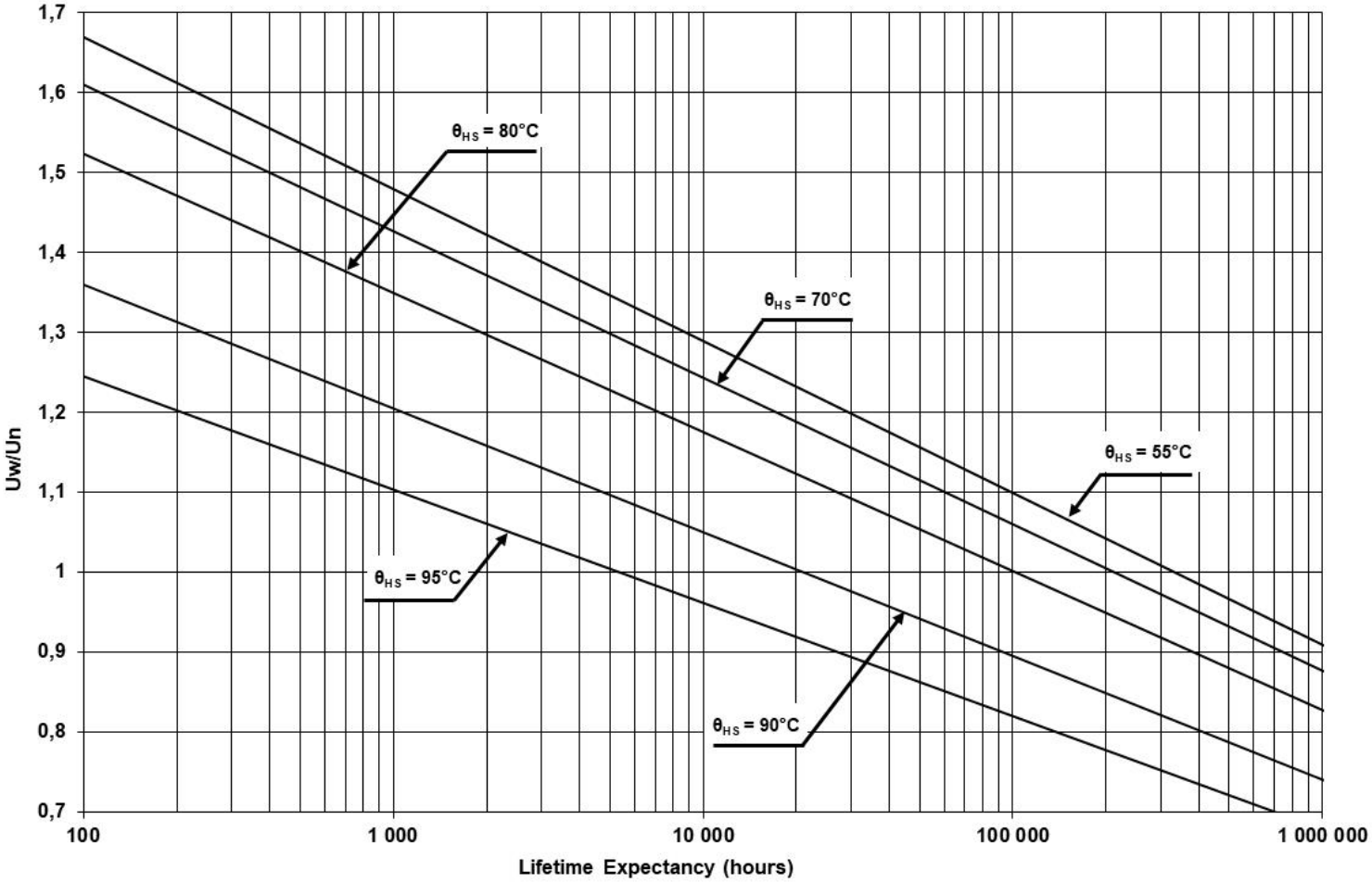

HOW TO CHOSE THE RIGHT CAPACITOR

The capacitor lifetime depends on the working voltage and the hot spot temperature.

Our caps are designed to meet 100,000 hours lifetime at rated voltage and 80°C hot spot temperature. In accordance with operating conditions, please calculate the hot spot temperature and deduce from this calculation if the obtained lifetime can suit the application.

1. **From the tables, select a capacitor with required capacitance C_n and voltage U_n.**

Calculate the maximum ripple voltage allowed for the selected cap:

$U_{rmax} = 0.2U_n$

If $U_r > U_{rmax}$, select a capacitor with higher rated voltage or contact your local sales representative

Make sure I_{rms} application < I_{rms} table

Copy out:

- serial resistance (R_s): see table of values
- thermal resistances R_{th1} and R_{th2} (depending on cooling conditions)

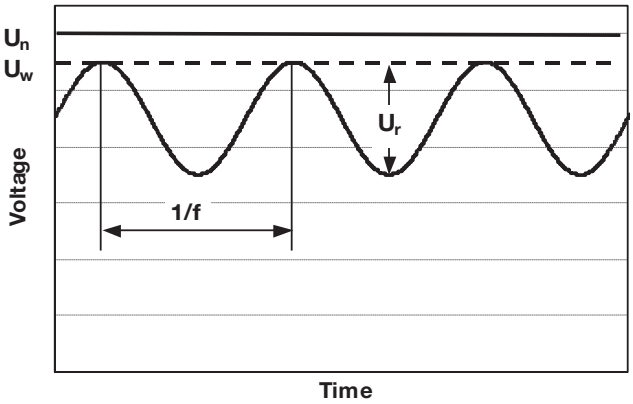

2. Hot spot temperature calculation

Total losses are calculated as follow: $P_t = P_j + P_d$

Joule losses: $P_j = R_s \times I_{rms^2}$

Dielectric losses: $P_d = Q \times tg\delta_0$ with

- Q(reactive power) = $\frac{I_{rms}^2}{C\omega}$ for a sinusoidal waveform
- $tg\delta_0 = 3 \times 10^{-4}$ (dielectric losses of polypropylene + oil)

Hot spot temperature will be:

$\theta_{HS} = \theta_{amb} + (P_j + P_d) \times (R_{th1} + R_{th2})$

θ_{HS} ***absolute maximum is 95°C***

If temperature is higher than 95°C, come back to #1 and start again with another selection.

R_{th1}: thermal resistance between hot spot and case

R_{th2}: thermal resistance between case and ambient air

R_{th1} : thermal resistance between hot spot and case

R_{th2} : thermal resistance between case and ambient air

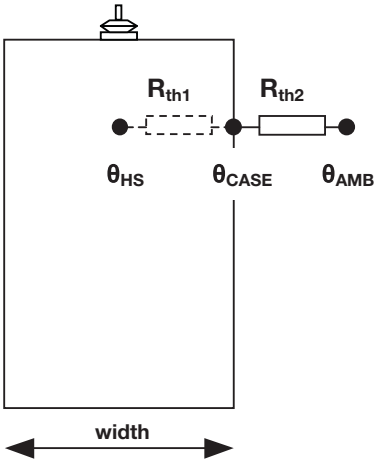

3. Refer to the curve and deduce the lifetime vs U_w/U_n ratio

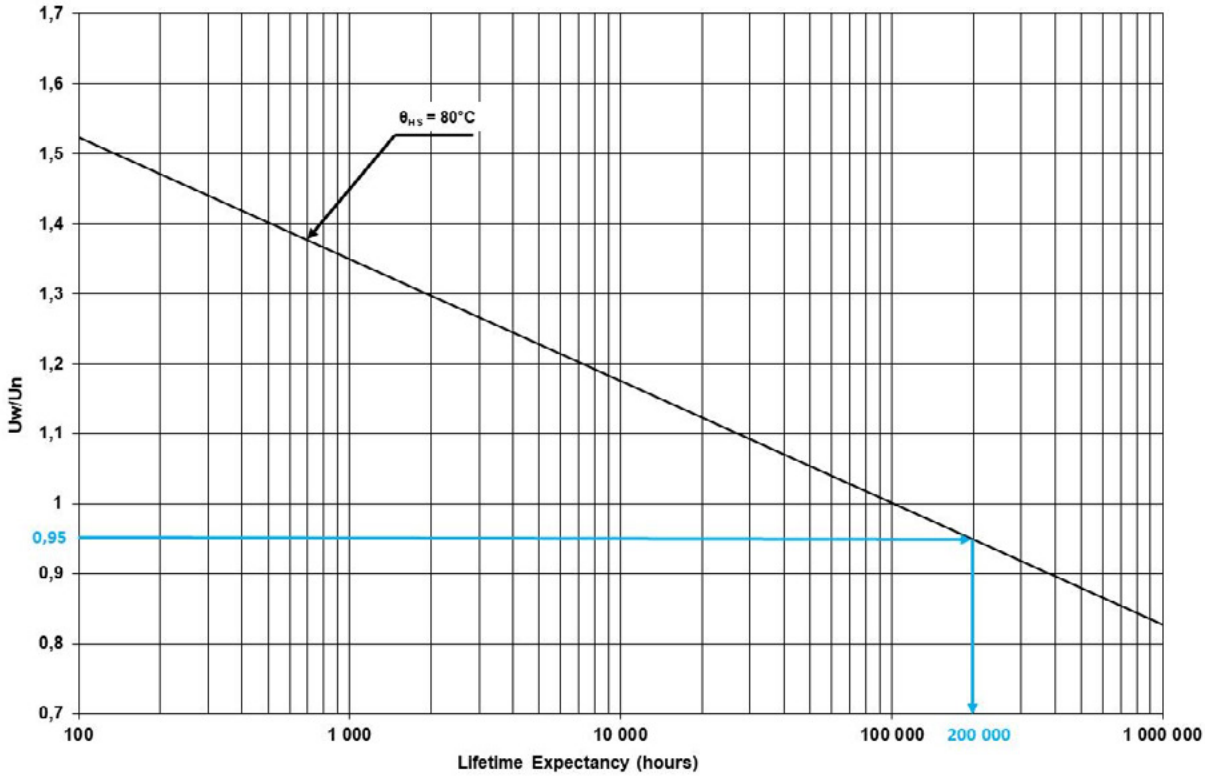

eg: rated voltage 2000V
working voltage 1900V
ρ = 0.95 ⇒ lifetime 200,000 hours @ 80°C hot spot temperature

Find a calculation form at the end of the catalog

THERMAL RESISTANCES

R_{th1} (°C/W): Thermal resistance between hot spot and case
R_{th2} (°C/W): Thermal resistance between case and ambient air under confined area, natural convection and forced air

Height (mm)	R_{th1} (°C/W)		R_{th2} (°C/W) Confined area		R_{th2} (°C/W) Natural air cooling		R_{th2} (°C/W) Forced air cooling >2m/s	
	Width (mm)		Width (mm)		Width (mm)		Width (mm)	
	117	165	117	165	117	165	117	165
215	0.23	0.29	0.71	0.6	0.34	0.29	0.17	0.15
290	0.18	0.23	0.54	0.48	0.26	0.23	0.13	0.11
365	0.14	0.19	0.44	0.39	0.21	0.19	0.11	0.09
440	0.12	0.16	0.37	0.33	0.18	0.16	0.09	0.08
515	0.1	0.14	0.33	0.29	0.16	0.14	0.08	0.07
590	0.09	0.12	0.29	0.25	0.14	0.12	0.07	0.06
705	0.08	0.1	0.25	0.21	0.12	0.1	0.06	0.05
815	0.07	0.09	0.21	0.19	0.1	0.09	0.05	0.05

Over the 3 theoretical thermal resistances, a thermal test under real conditions is absolutely necessary in order to characterize the real thermal transfer depending of thermal topology

PARASITIC INDUCTANCE VS SIZE

Measurement @ 1MHz

Height (mm)	Ls (nH)							
	2 terminals type 1/2		2 terminals type 3/4		4 terminals type 1/2		4 terminals type 3/4	
	Width (mm)		Width (mm)		Width (mm)		Width (mm)	
	117	165	117	165	117	165	117	165
215	69	73	109	113	24	28	34	38
290	72	78	112	118	27	33	37	43
365	75	82	115	122	30	37	40	47
440	78	87	118	127	33	42	43	52
515	81	91	121	131	36	46	46	56
590	84	96	124	136	39	51	49	61
705	89	103	129	143	44	58	54	68
815	93	109	133	149	48	64	58	74

MTBF CALCULATION

The failure rate λ_B depends on hot spot temperature θ_{HS} and charge ratio ρ.

$\rho = U_w/U_n$

$$\lambda_B = 3\times10^{5,738(\rho-1)}\times e^{\left(3,933\left(\frac{\theta_{HS}+273}{368}\right)^{27,75}\right)}\times10^{-9} \quad \text{in failures/hour}$$

GENERAL FAILURE RATE

$\lambda=\lambda_B$ x π_Q x π_B x π_E failures/hour • π_Q, π_B and π_E see following tables

Qualification	Qualification factor πQ
Product qualified on IEC61071 or IEC61881 and internal qualification	1
Product qualified on IEC61071 or IEC61881	2
Product answering on another norm	5
Product without qualification	15

Environment	Environment factor πE
On ground (good conditions)	1
On ground (fixed materials)	2
On ground (on board)	4
On ship	9
On plane	15

Environment	Environment factor πB
Favorable	1
Unfavourable	5

MEAN TIME BETWEEN FAILURE (MTBF)

MTBF = 1/λ hours

SURVIVAL FUNCTION

$N = N_0$ x exp (-λt)

N is the number of pieces still working after t hours.

N_0 is the number of pieces at the origin (t = 0)

FAILURE MODE

Main failure mode due to KYOCERA AVX's **Controlled Self-Healing Technology** is only losses of capacitance. Thanks to the **Controlled Self-Healing Technology,** the efficient solution to interrupt the self-healing process and prevent the avalanche effect leading to the worse sequence of events for none controlled self-healing capacitors: polypropylene molecular cracking, gas emission and potential explosion in confined box.

DIMENSIONS

Lower brackets removed for H<500mm

2 TERMINALS Type 1

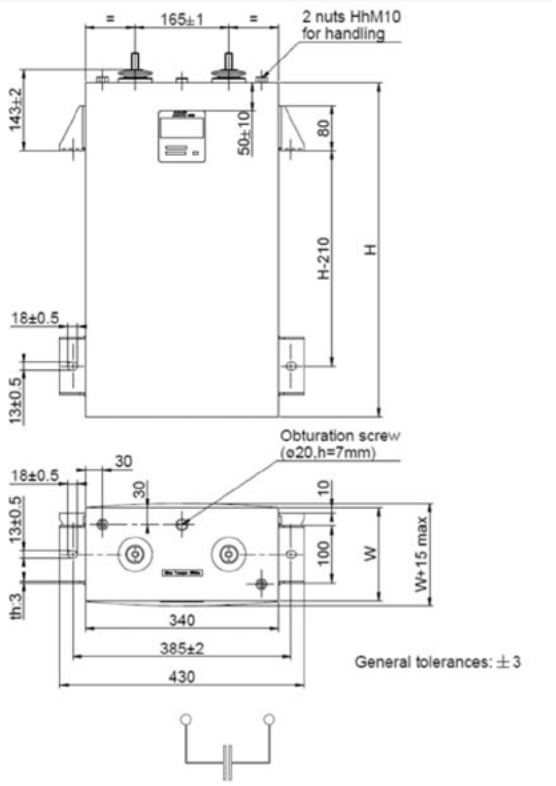

4 TERMINALS Type 1

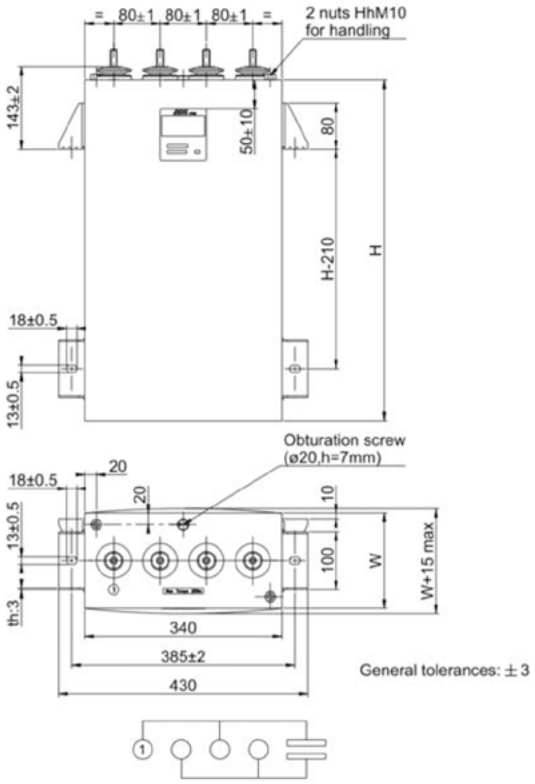

2 TERMINALS Type 2

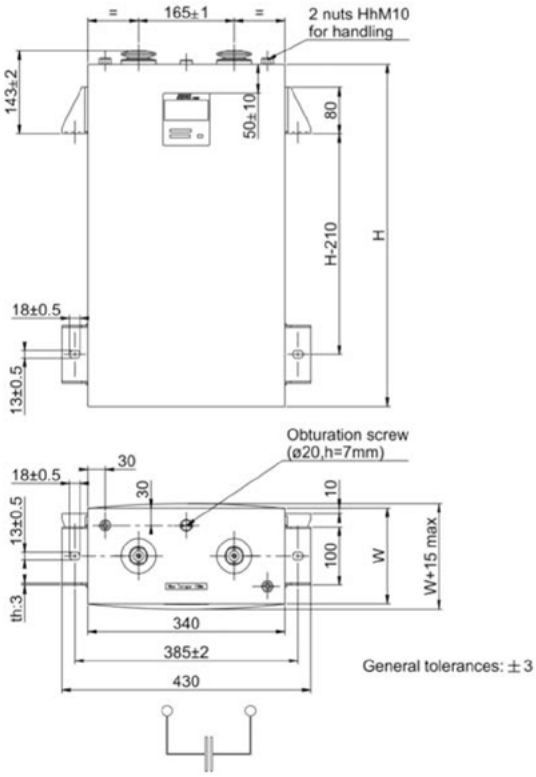

4 TERMINALS Type 2

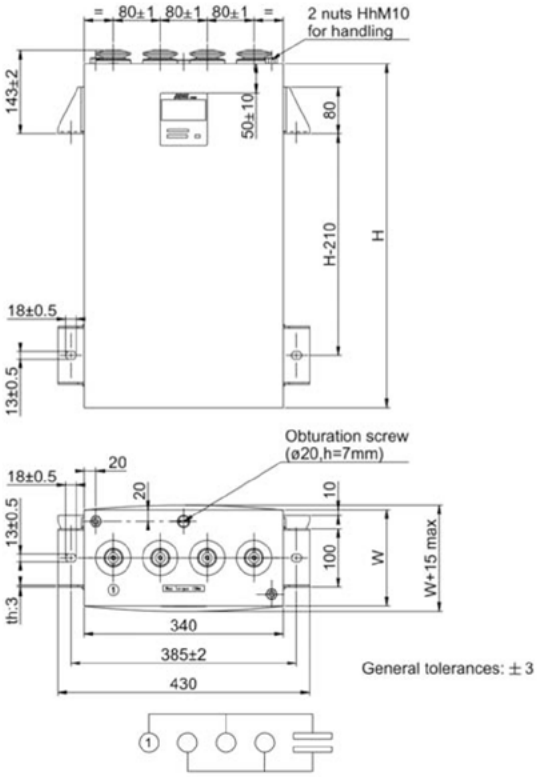

DIMENSIONS

Lower brackets removed for H<500mm

2 TERMINALS Type 3

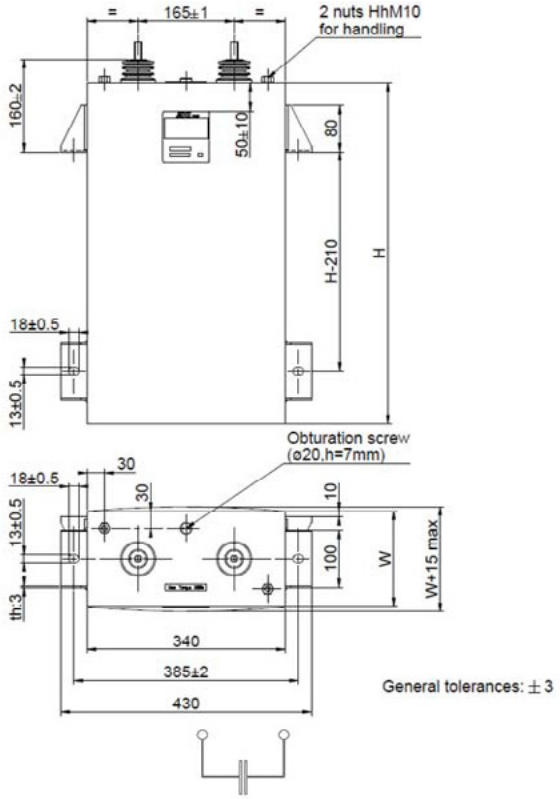

4 TERMINALS Type 3

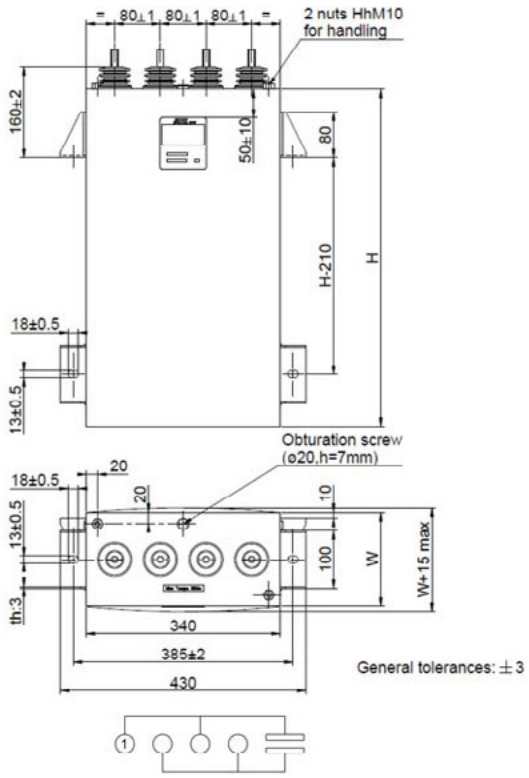

2 TERMINALS Type 4

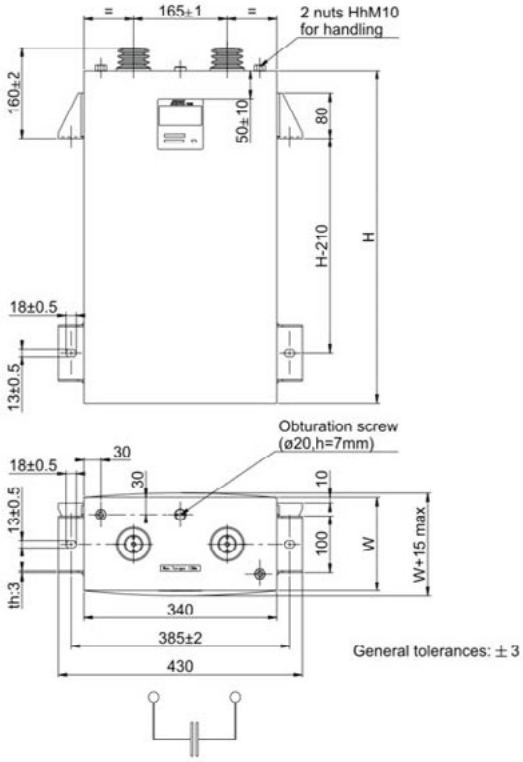

4 TERMINALS Type 4

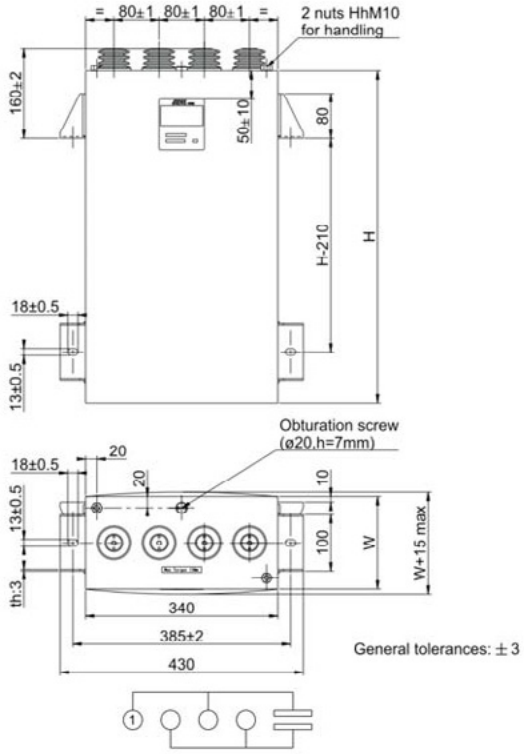

DIMENSIONS

Type 1
(max torque 25 Nm)

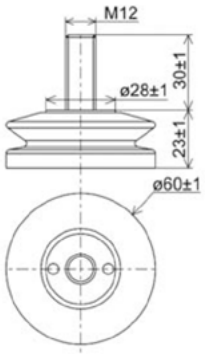

Type 2
(max torque 20 Nm)

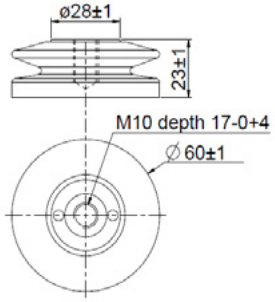

Type 3
(max torque 25 Nm)

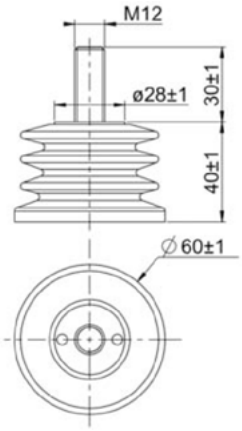

Type 4
(max torque 20 Nm)

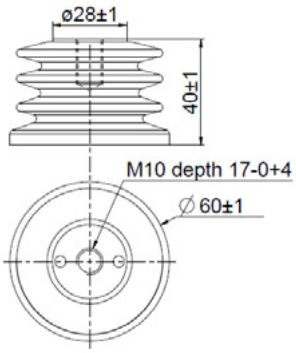

Terminals type	Creepage distance	Air distance
1 and 2	52mm	30mm
3 and 2	84mm	50mn

WEIGHT VS SIZE

Height (mm)	Weight (kg)			
	2 terminals		4 terminals	
	Width (mm)		Width (mm)	
	117	165	117	165
215	14	19	15	20
290	18	24	19	25
365	21.5	29	22.5	30
440	25.5	34.5	26.5	35.5
515	30	39.5	31	40.5
590	34	44.5	35	45.5
705	40	52.5	41	53.5
815	45.5	60	46.5	61

RATINGS AND PART NUMBER REFERENCE

Un = 1950Vdc							
Part Number	Capacitance (µF)	Width (mm)	Height (mm)	R_S (mΩ)	Irms thermal 1 (A)	Irms thermal 2 (A)	Irms thermal 3 (A)
DKTFM1*#B1347	1340	117	215	0.66	145	185	220
DKTFM2*#B1347	1340	117	215	0.58	150	195	230
DKTFM1*#B2027	2020	117	290	0.50	190	245	255
DKTFM2*#B2027	2020	117	290	0.42	200	260	310
DKTFM3*#B2117	2110	165	215	0.92	135	170	195
DKTFM4*#B2117	2110	165	215	0.83	145	180	205
DKTFM1*#B2707	2700	117	365	0.43	230	255	255
DKTFM2*#B2707	2700	117	365	0.35	250	320	385
DKTFM3*#B3177	3170	165	290	0.69	180	225	255
DKTFM4*#B3177	3170	165	290	0.60	190	240	275
DKTFM1*#B3367	3360	117	440	0.39	255	255	255
DKTFM2*#B3367	3360	117	440	0.31	295	380	400
DKTFM1*#B4037	4030	117	515	0.37	255	255	255
DKTFM2*#B4037	4030	117	515	0.29	335	400	400
DKTFM3*#B4237	4230	165	365	0.58	220	255	255
DKTFM4*#B4237	4230	165	365	0.49	235	295	340
DKTFM1*#B4707	4700	117	590	0.35	255	255	255
DKTFM2*#B4707	4700	117	590	0.27	375	400	400
DKTFM3*#B5297	5290	165	440	0.52	255	255	255
DKTFM4*#B5297	5290	165	440	0.43	280	345	400
DKTFM1*#B5727	5720	117	705	0.34	255	255	255
DKTFM2*#B5727	5720	117	705	0.26	400	400	400
DKTFM3*#B6347	6340	165	515	0.48	255	255	255
DKTFM4*#B6347	6340	165	515	0.39	315	390	400
DKTFM1*#B6737	6730	117	815	0.33	255	255	255
DKTFM2*#B6737	6730	117	815	0.25	400	400	400
DKTFM3*#B7407	7400	165	590	0.45	255	255	255
DKTFM4*#B7407	7400	165	590	0.36	350	400	400
DKTFM3*#B8987	8980	165	705	0.43	255	255	255
DKTFM4*#B8987	8980	165	705	0.34	400	400	400
DKTFM3*#B1068	10600	165	815	0.41	255	255	255
DKTFM4*#B1068	10600	165	815	0.32	400	400	400

* Insert terminal type (**1, 2, 3** or **4**) # Insert **W** (without) or **M** (brackets) for fixing

RATINGS AND PART NUMBER REFERENCE

Un = 2150Vdc							
Part Number	Capacitance (µF)	Width (mm)	Height (mm)	R_S (mΩ)	Irms thermal 1 (A)	Irms thermal 2 (A)	Irms thermal 3 (A)
DKTFM1*#C1067	1060	117	215	0.72	135	170	205
DKTFM2*#C1067	1060	117	215	0.64	140	180	215
DKTFM1*#C1607	1600	117	290	0.54	180	230	255
DKTFM2*#C1607	1600	117	290	0.46	190	240	290
DKTFM3*#C1687	1680	165	215	1.00	130	160	185
DKTFM4*#C1687	1680	165	215	0.91	135	165	195
DKTFM1*#C2147	2140	117	365	0.46	220	255	255
DKTFM2*#C2147	2140	117	365	0.38	235	300	360
DKTFM3*#C2527	2520	165	290	0.75	170	215	245
DKTFM4*#C2527	2520	165	290	0.66	180	225	260
DKTFM1*#C2677	2670	117	440	0.42	255	255	255
DKTFM2*#C2677	2670	117	440	0.34	275	350	400
DKTFM1*#C3207	3200	117	515	0.39	255	255	255
DKTFM2*#C3207	3200	117	515	0.31	315	400	400
DKTFM3*#C3367	3360	165	365	0.62	210	255	255
DKTFM4*#C3367	3360	165	365	0.53	225	280	320
DKTFM1*#C3737	3730	117	590	0.37	255	255	255
DKTFM2*#C3737	3730	117	590	0.29	355	400	400
DKTFM3*#C4207	4200	165	440	0.55	245	255	255
DKTFM4*#C4207	4200	165	440	0.46	265	325	380
DKTFM1*#C4557	4550	117	705	0.35	255	255	255
DKTFM2*#C4557	4550	117	705	0.27	400	400	400
DKTFM3*#C5047	5040	165	515	0.51	255	255	255
DKTFM4*#C5047	5040	165	515	0.42	300	375	400
DKTFM1*#C5357	5350	117	815	0.34	255	255	255
DKTFM2*#C5357	5350	117	815	0.26	400	400	400
DKTFM3*#C5887	5880	165	590	0.48	255	255	255
DKTFM4*#C5887	5880	165	590	0.39	335	400	400
DKTFM3*#C7147	7140	165	705	0.45	255	255	255
DKTFM4*#C7147	7140	165	705	0.36	380	400	400
DKTFM3*#C8407	8400	165	815	0.43	255	255	255
DKTFM4*#C8407	8400	165	815	0.34	400	400	400

* Insert terminal type (**1, 2, 3** or **4**) # Insert **W** (without) or **M** (brackets) for fixing

RATINGS AND PART NUMBER REFERENCE

Un = 2350Vdc							
Part Number	Capacitance (µF)	Width (mm)	Height (mm)	R_S (mΩ)	Irms thermal 1 (A)	Irms thermal 2 (A)	Irms thermal 3 (A)
DKTFM1*#D0917	910	117	215	0.76	125	165	195
DKTFM2*#D0917	910	117	215	0.68	130	170	205
DKTFM1*#D1367	1360	117	290	0.57	170	220	255
DKTFM2*#D1367	1360	117	290	0.49	180	230	275
DKTFM3*#D1427	1420	165	215	1.08	125	155	175
DKTFM4*#D1427	1420	165	215	0.99	130	160	185
DKTFM1*#D1827	1820	117	365	0.48	210	255	255
DKTFM2*#D1827	1820	117	365	0.40	225	285	345
DKTFM3*#D2147	2140	165	290	0.79	165	205	235
DKTFM4*#D2147	2140	165	290	0.70	175	215	250
DKTFM1*#D2277	2270	117	440	0.43	245	255	255
DKTFM2*#D2277	2270	117	440	0.35	265	340	400
DKTFM1*#D2727	2720	117	515	0.40	255	255	255
DKTFM2*#D2727	2720	117	515	0.32	305	390	400
DKTFM3*#D2857	2850	165	365	0.66	200	250	255
DKTFM4*#D2857	2850	165	365	0.57	215	265	310
DKTFM1*#D3177	3170	117	590	0.38	255	255	255
DKTFM2*#D3177	3170	117	590	0.30	340	400	400
DKTFM3*#D3577	3570	165	440	0.58	235	255	255
DKTFM4*#D3577	3570	165	440	0.49	255	315	360
DKTFM1*#D3857	3850	117	705	0.36	255	255	255
DKTFM2*#D3857	3850	117	705	0.28	390	400	400
DKTFM3*#D4287	4280	165	515	0.53	255	255	255
DKTFM4*#D4287	4280	165	515	0.44	290	360	400
DKTFM1*#D4537	4530	117	815	0.35	255	255	255
DKTFM2*#D4537	4530	117	815	0.27	400	400	400
DKTFM3*#D5007	5000	165	590	0.50	255	255	255
DKTFM4*#D5007	5000	165	590	0.41	320	400	400
DKTFM3*#D6077	6070	165	705	0.47	255	255	255
DKTFM4*#D6077	6070	165	705	0.37	370	400	400
DKTFM3*#D7147	7140	165	815	0.45	255	255	255
DKTFM4*#D7147	7140	165	815	0.35	400	400	400

* Insert terminal type (**1, 2, 3** or **4**) # Insert **W** (without) or **M** (brackets) for fixing

RATINGS AND PART NUMBER REFERENCE

Un = 2600Vdc							
Part Number	Capacitance (µF)	Width (mm)	Height (mm)	R_S (mΩ)	Irms thermal 1 (A)	Irms thermal 2 (A)	Irms thermal 3 (A)
DKTFM1*#E7356	735	117	215	0.82	120	150	185
DKTFM2*#E7356	735	117	215	0.74	125	155	190
DKTFM1*#E1107	1100	117	290	0.62	160	205	245
DKTFM2*#E1107	1100	117	290	0.54	165	215	255
DKTFM3*#E1157	1150	165	215	1.17	115	145	165
DKTFM4*#E1157	1150	165	215	1.08	120	150	170
DKTFM1*#E1477	1470	117	365	0.52	200	255	255
DKTFM2*#E1477	1470	117	365	0.44	210	270	320
DKTFM3*#E1737	1730	165	290	0.86	155	195	225
DKTFM4*#E1737	1730	165	290	0.77	165	200	235
DKTFM1*#E1847	1840	117	440	0.46	235	255	255
DKTFM2*#E1847	1840	117	440	0.38	250	320	380
DKTFM1*#E2207	2200	117	515	0.42	255	255	255
DKTFM2*#E2207	2200	117	515	0.34	285	365	400
DKTFM3*#E2307	2300	165	365	0.71	190	240	255
DKTFM4*#E2307	2300	165	365	0.62	205	250	290
DKTFM1*#E2577	2570	117	590	0.40	255	255	255
DKTFM2*#E2577	2570	117	590	0.32	320	400	400
DKTFM3*#E2877	2870	165	440	0.62	225	255	255
DKTFM4*#E2877	2870	165	440	0.53	240	300	345
DKTFM1*#E3127	3120	117	705	0.38	255	255	255
DKTFM2*#E3127	3120	117	705	0.30	370	400	400
DKTFM3*#E3457	3450	165	515	0.57	255	255	255
DKTFM4*#E3457	3450	165	515	0.47	275	340	395
DKTFM1*#E3687	3680	117	815	0.36	255	255	255
DKTFM2*#E3687	3680	117	815	0.28	400	400	400
DKTFM3*#E4027	4020	165	590	0.53	255	255	255
DKTFM4*#E4027	4020	165	590	0.44	305	380	400
DKTFM3*#E4907	4900	165	705	0.49	255	255	255
DKTFM4*#E4907	4900	165	705	0.40	355	400	400
DKTFM3*#E5737	5730	165	815	0.47	255	255	255
DKTFM4*#E5737	5730	165	815	0.38	390	400	400

* Insert terminal type (**1, 2, 3** or **4**) # Insert **W** (without) or **M** (brackets) for fixing

RATINGS AND PART NUMBER REFERENCE

Un = 2900Vdc							
Part Number	Capacitance (µF)	Width (mm)	Height (mm)	R_S (mΩ)	Irms thermal 1 (A)	Irms thermal 2 (A)	Irms thermal 3 (A)
DKTFM1*#F0617	610	117	215	0.89	110	140	170
DKTFM2*#F0617	610	117	215	0.81	115	145	175
DKTFM1*#F0917	910	117	290	0.66	150	195	235
DKTFM2*#F0917	910	117	290	0.58	155	200	240
DKTFM3*#F9556	955	165	215	1.27	110	135	160
DKTFM4*#F9556	955	165	215	1.17	115	140	165
DKTFM1*#F1217	1210	117	365	0.55	185	240	255
DKTFM2*#F1217	1210	117	365	0.47	195	250	300
DKTFM3*#F1437	1430	165	290	0.92	150	185	215
DKTFM4*#F1437	1430	165	290	0.83	155	190	220
DKTFM1*#F1527	1520	117	440	0.49	220	255	255
DKTFM2*#F1527	1520	117	440	0.41	235	300	360
DKTFM1*#F1827	1820	117	515	0.45	255	255	255
DKTFM2*#F1827	1820	117	515	0.37	270	345	400
DKTFM3*#F1917	1910	165	365	0.75	185	230	255
DKTFM4*#F1917	1910	165	365	0.66	195	240	275
DKTFM1*#F2127	2120	117	590	0.42	255	255	255
DKTFM2*#F2127	2120	117	590	0.34	305	390	400
DKTFM3*#F2387	2380	165	440	0.66	215	255	255
DKTFM4*#F2387	2380	165	440	0.57	230	285	330
DKTFM1*#F2587	2580	117	705	0.39	255	255	255
DKTFM2*#F2587	2580	117	705	0.31	350	400	400
DKTFM3*#F2867	2860	165	515	0.60	245	255	255
DKTFM4*#F2867	2860	165	515	0.50	260	325	375
DKTFM1*#F3047	3040	117	815	0.38	255	255	255
DKTFM2*#F3047	3040	117	815	0.30	395	400	400
DKTFM3*#F3347	3340	165	590	0.55	255	255	255
DKTFM4*#F3347	3340	165	590	0.46	295	365	400
DKTFM3*#F4067	4060	165	705	0.51	255	255	255
DKTFM4*#F4067	4060	165	705	0.42	335	400	400
DKTFM3*#F4777	4770	165	815	0.49	255	255	255
DKTFM4*#F4777	4770	165	815	0.39	375	400	400

* Insert terminal type (**1, 2, 3** or **4**) # Insert **W** (without) or **M** (brackets) for fixing

RATINGS AND PART NUMBER REFERENCE

Un = 3150Vdc							
Part Number	Capacitance (µF)	Width (mm)	Height (mm)	R_S (mΩ)	Irms thermal 1 (A)	Irms thermal 2 (A)	Irms thermal 3 (A)
DKTFM1*#G0517	510	117	215	0.95	105	135	160
DKTFM2*#G0517	510	117	215	0.87	105	140	165
DKTFM1*#G7656	765	117	290	0.70	145	185	220
DKTFM2*#G7656	765	117	290	0.62	145	190	225
DKTFM3*#G0807	800	165	215	1.36	105	130	150
DKTFM4*#G0807	800	165	215	1.27	105	135	155
DKTFM1*#G1027	1020	117	365	0.58	180	225	255
DKTFM2*#G1027	1020	117	365	0.50	185	235	280
DKTFM3*#G1207	1200	165	290	0.99	140	175	200
DKTFM4*#G1207	1200	165	290	0.90	145	180	210
DKTFM1*#G1277	1270	117	440	0.51	210	255	255
DKTFM2*#G1277	1270	117	440	0.43	220	280	335
DKTFM1*#G1537	1530	117	515	0.47	240	255	255
DKTFM2*#G1537	1530	117	515	0.39	255	320	385
DKTFM3*#G1607	1600	165	365	0.80	175	215	250
DKTFM4*#G1607	1600	165	365	0.71	185	225	260
DKTFM1*#G1787	1780	117	590	0.44	255	255	255
DKTFM2*#G1787	1780	117	590	0.36	290	365	400
DKTFM3*#G2007	2000	165	440	0.70	205	255	255
DKTFM4*#G2007	2000	165	440	0.61	215	270	310
DKTFM1*#G2177	2170	117	705	0.41	255	255	255
DKTFM2*#G2177	2170	117	705	0.33	335	400	400
DKTFM3*#G2407	2400	165	515	0.63	235	255	255
DKTFM4*#G2407	2400	165	515	0.54	250	310	360
DKTFM1*#G2557	2550	117	815	0.39	255	255	255
DKTFM2*#G2557	2550	117	815	0.31	375	400	400
DKTFM3*#G2807	2800	165	590	0.58	255	255	255
DKTFM4*#G2807	2800	165	590	0.49	280	350	400
DKTFM3*#G3407	3400	165	705	0.54	255	255	255
DKTFM4*#G3407	3400	165	705	0.44	325	400	400
DKTFM3*#G4007	4000	165	815	0.51	255	255	255
DKTFM4*#G4007	4000	165	815	0.41	360	400	400

* Insert terminal type (**1, 2, 3** or **4**) # Insert **W** (without) or **M** (brackets) for fixing

RATINGS AND PART NUMBER REFERENCE

Un = 3750Vdc							
Part Number	Capacitance (µF)	Width (mm)	Height (mm)	R_S (mΩ)	Irms thermal 1 (A)	Irms thermal 2 (A)	Irms thermal 3 (A)
DKTFM1*#H0337	330	117	215	1.14	90	110	130
DKTFM2*#H0337	330	117	215	1.06	90	115	135
DKTFM1*#H4956	495	117	290	0.83	125	155	185
DKTFM2*#H4956	495	117	290	0.75	125	160	190
DKTFM3*#H0537	530	165	215	1.63	90	115	130
DKTFM4*#H0537	530	165	215	1.54	95	120	135
DKTFM1*#H0667	660	117	365	0.67	155	195	230
DKTFM2*#H0667	660	117	365	0.59	160	200	240
DKTFM3*#H7956	795	165	290	1.16	125	155	180
DKTFM4*#H7956	795	165	290	1.07	130	160	185
DKTFM1*#H8256	825	117	440	0.59	185	230	255
DKTFM2*#H8256	825	117	440	0.51	190	240	290
DKTFM1*#H9856	985	117	515	0.53	210	255	255
DKTFM2*#H9856	985	117	515	0.45	220	280	335
DKTFM3*#H1067	1060	165	365	0.94	155	195	225
DKTFM4*#H1067	1060	165	365	0.84	160	200	230
DKTFM1*#H1157	1150	117	590	0.49	240	255	255
DKTFM2*#H1157	1150	117	590	0.41	250	315	380
DKTFM3*#H1327	1320	165	440	0.80	185	230	255
DKTFM4*#H1327	1320	165	440	0.71	190	240	275
DKTFM1*#H1407	1400	117	705	0.45	255	255	255
DKTFM2*#H1407	1400	117	705	0.37	290	370	400
DKTFM3*#H1597	1590	165	515	0.72	210	255	255
DKTFM4*#H1597	1590	165	515	0.63	220	275	320
DKTFM1*#H1657	1650	117	815	0.43	255	255	255
DKTFM2*#H1657	1650	117	815	0.35	310	400	400
DKTFM3*#H1857	1850	165	590	0.66	235	255	255
DKTFM4*#H1857	1850	165	590	0.57	250	310	360
DKTFM3*#H2257	2250	165	705	0.60	255	255	255
DKTFM4*#H2257	2250	165	705	0.51	290	360	400
DKTFM3*#H2657	2650	165	815	0.56	255	255	255
DKTFM4*#H2657	2650	165	815	0.47	330	400	400

* Insert terminal type (**1, 2, 3** or **4**) # Insert **W** (without) or **M** (brackets) for fixing

RATINGS AND PART NUMBER REFERENCE

Un = 4200Vdc							
Part Number	Capacitance (µF)	Width (mm)	Height (mm)	R_S (mΩ)	Irms thermal 1 (A)	Irms thermal 2 (A)	Irms thermal 3 (A)
DKTFM1*#I0267	260	117	215	1.26	80	100	120
DKTFM2*#I0267	260	117	215	1.18	80	105	125
DKTFM1*#I0397	390	117	290	0.91	110	140	170
DKTFM2*#I0397	390	117	290	0.83	115	145	175
DKTFM3*#I0427	420	165	215	1.80	85	105	120
DKTFM4*#I0427	420	165	215	1.71	85	110	125
DKTFM1*#I0527	520	117	365	0.73	140	180	215
DKTFM2*#I0527	520	117	365	0.65	145	185	220
DKTFM3*#I0637	630	165	290	1.28	115	140	165
DKTFM4*#I0637	630	165	290	1.19	120	145	170
DKTFM1*#I0657	650	117	440	0.63	170	215	255
DKTFM2*#I0657	650	117	440	0.55	175	225	265
DKTFM1*#I0787	780	117	515	0.57	195	250	255
DKTFM2*#I0787	780	117	515	0.49	205	260	310
DKTFM3*#I8356	835	165	365	1.03	145	180	210
DKTFM4*#I8356	835	165	365	0.94	150	185	215
DKTFM1*#I0917	910	117	590	0.53	220	255	255
DKTFM2*#I0917	910	117	590	0.45	230	295	355
DKTFM3*#I1047	1040	165	440	0.88	170	215	250
DKTFM4*#I1047	1040	165	440	0.79	180	220	255
DKTFM1*#I1107	1100	117	705	0.48	255	255	255
DKTFM2*#I1107	1100	117	705	0.40	270	350	400
DKTFM3*#I1257	1250	165	515	0.78	200	245	255
DKTFM4*#I1257	1250	165	515	0.69	210	255	295
DKTFM1*#I1307	1300	117	815	0.45	255	255	255
DKTFM2*#I1307	1300	117	815	0.37	305	400	400
DKTFM3*#I1467	1460	165	590	0.71	225	255	255
DKTFM4*#I1467	1460	165	590	0.62	235	290	335
DKTFM3*#I1787	1780	165	705	0.64	255	255	255
DKTFM4*#I1787	1780	165	705	0.55	275	340	395
DKTFM3*#I2087	2080	165	815	0.60	255	255	255
DKTFM4*#I2087	2080	165	815	0.51	290	385	400

* Insert terminal type (**1, 2, 3** or **4**) # Insert **W** (without) or **M** (brackets) for fixing

RATINGS AND PART NUMBER REFERENCE

Un = 4700Vdc							
Part Number	Capacitance (µF)	Width (mm)	Height (mm)	R_S (mΩ)	Irms thermal 1 (A)	Irms thermal 2 (A)	Irms thermal 3 (A)
DKTFM1*#J2056	205	117	215	0.77	80	100	120
DKTFM2*#J2056	205	117	215	0.69	80	105	125
DKTFM1*#J0317	310	117	290	0.58	110	140	170
DKTFM2*#J0317	310	117	290	0.50	115	145	175
DKTFM3*#J3356	335	165	215	1.08	90	115	130
DKTFM4*#J3356	335	165	215	0.99	95	120	135
DKTFM1*#J0417	410	117	365	0.49	140	180	220
DKTFM2*#J0417	410	117	365	0.41	145	185	225
DKTFM3*#J5056	505	165	290	0.80	125	155	180
DKTFM4*#J5056	505	165	290	0.71	130	160	185
DKTFM1*#J5156	515	117	440	0.44	170	220	255
DKTFM2*#J5156	515	117	440	0.36	175	225	270
DKTFM1*#J6156	615	117	515	0.41	195	255	255
DKTFM2*#J6156	615	117	515	0.33	205	260	315
DKTFM3*#J0677	670	165	365	0.66	155	195	225
DKTFM4*#J0677	670	165	365	0.57	160	200	235
DKTFM1*#J0727	720	117	590	0.38	220	255	255
DKTFM2*#J0727	720	117	590	0.30	230	300	355
DKTFM3*#J0847	840	165	440	0.58	185	230	255
DKTFM4*#J0847	840	165	440	0.49	195	240	280
DKTFM1*#J8756	875	117	705	0.36	255	255	255
DKTFM2*#J8756	875	117	705	0.28	270	350	400
DKTFM3*#J1007	1000	165	515	0.54	215	255	255
DKTFM4*#J1007	1000	165	515	0.44	225	280	320
DKTFM1*#J1037	1030	117	815	0.35	255	255	255
DKTFM2*#J1037	1030	117	815	0.27	310	400	400
DKTFM3*#J1177	1170	165	590	0.50	240	255	255
DKTFM4*#J1177	1170	165	590	0.41	250	315	365
DKTFM3*#J1427	1420	165	705	0.47	255	255	255
DKTFM4*#J1427	1420	165	705	0.38	295	365	400
DKTFM3*#J1687	1680	165	815	0.45	255	255	255
DKTFM4*#J1687	1680	165	815	0.36	330	400	400

* Insert terminal type (**1, 2, 3** or **4**) # Insert **W** (without) or **M** (brackets) for fixing

RATINGS AND PART NUMBER REFERENCE

Un = 5200Vdc							
Part Number	Capacitance (µF)	Width (mm)	Height (mm)	R_S (mΩ)	Irms thermal 1 (A)	Irms thermal 2 (A)	Irms thermal 3 (A)
DKTFM1*#K0167	160	117	215	0.85	70	90	110
DKTFM2*#K0167	160	117	215	0.77	70	95	115
DKTFM1*#K0247	240	117	290	0.63	100	125	150
DKTFM2*#K0247	240	117	290	0.55	100	130	155
DKTFM3*#K2656	265	165	215	1.18	85	105	120
DKTFM4*#K2656	265	165	215	1.09	85	110	125
DKTFM1*#K3156	315	117	365	0.53	125	160	195
DKTFM2*#K3156	315	117	365	0.45	130	165	200
DKTFM3*#K3956	395	165	290	0.87	115	145	165
DKTFM4*#K3956	395	165	290	0.78	115	150	170
DKTFM1*#K3956	395	117	440	0.47	150	195	235
DKTFM2*#K3956	395	117	440	0.39	155	200	240
DKTFM1*#K4756	475	117	515	0.43	180	230	255
DKTFM2*#K4756	475	117	515	0.35	185	235	280
DKTFM3*#K5256	525	165	365	0.72	145	180	205
DKTFM4*#K5256	525	165	365	0.63	150	185	210
DKTFM1*#K0557	550	117	590	0.41	200	255	255
DKTFM2*#K0557	550	117	590	0.33	210	270	320
DKTFM3*#K6556	655	165	440	0.63	170	210	245
DKTFM4*#K6556	655	165	440	0.54	175	220	255
DKTFM1*#K6756	675	117	705	0.38	235	255	255
DKTFM2*#K6756	675	117	705	0.30	245	315	380
DKTFM3*#K7856	785	165	515	0.57	195	245	255
DKTFM4*#K7856	785	165	515	0.48	205	255	295
DKTFM1*#K0797	790	117	815	0.37	255	255	255
DKTFM2*#K0797	790	117	815	0.29	280	360	400
DKTFM3*#K9156	915	165	590	0.53	220	255	255
DKTFM4*#K9156	915	165	590	0.44	230	290	335
DKTFM3*#K1117	1110	165	705	0.50	255	255	255
DKTFM4*#K1117	1110	165	705	0.40	270	335	390
DKTFM3*#K1307	1300	165	815	0.47	255	255	255
DKTFM4*#K1307	1300	165	815	0.38	305	380	400

* Insert terminal type (**1, 2, 3** or **4**) # Insert **W** (without) or **M** (brackets) for fixing

RATINGS AND PART NUMBER REFERENCE

Un = 5800Vdc							
Part Number	Capacitance (µF)	Width (mm)	Height (mm)	R_S (mΩ)	Irms thermal 1 (A)	Irms thermal 2 (A)	Irms thermal 3 (A)
DKTFM1*#L0137	130	117	215	0.91	60	80	100
DKTFM2*#L0137	130	117	215	0.83	60	85	105
DKTFM1*#L1956	195	117	290	0.68	90	115	140
DKTFM2*#L1956	195	117	290	0.60	90	120	145
DKTFM3*#L2156	215	165	215	1.29	75	95	110
DKTFM4*#L2156	215	165	215	1.20	75	100	115
DKTFM1*#L0267	260	117	365	0.56	115	150	180
DKTFM2*#L0267	260	117	365	0.48	120	155	185
DKTFM3*#L3256	325	165	290	0.94	105	130	150
DKTFM4*#L3256	325	165	290	0.85	110	135	155
DKTFM1*#L3256	325	117	440	0.50	140	180	215
DKTFM2*#L3256	325	117	440	0.42	145	185	220
DKTFM1*#L0397	390	117	515	0.45	165	210	255
DKTFM2*#L0397	390	117	515	0.37	170	215	260
DKTFM3*#L4356	435	165	365	0.77	135	165	190
DKTFM4*#L4356	435	165	365	0.68	140	170	195
DKTFM1*#L4556	455	117	590	0.43	185	240	255
DKTFM2*#L4556	455	117	590	0.35	190	245	295
DKTFM3*#L0547	540	165	440	0.67	160	200	230
DKTFM4*#L0547	540	165	440	0.58	165	205	235
DKTFM1*#L5556	555	117	705	0.40	220	255	255
DKTFM2*#L5556	555	117	705	0.32	230	295	350
DKTFM3*#L0657	650	165	515	0.61	185	230	255
DKTFM4*#L0657	650	165	515	0.51	190	240	275
DKTFM1*#L6556	655	117	815	0.38	250	255	255
DKTFM2*#L6556	655	117	815	0.30	260	335	400
DKTFM3*#L7556	755	165	590	0.56	210	255	255
DKTFM4*#L7556	755	165	590	0.47	215	270	310
DKTFM3*#L0927	920	165	705	0.52	245	255	255
DKTFM4*#L0927	920	165	705	0.43	255	315	365
DKTFM3*#L1087	1080	165	815	0.49	255	255	255
DKTFM4*#L1087	1080	165	815	0.40	290	360	400

* Insert terminal type (**1, 2, 3** or **4**) # Insert **W** (without) or **M** (brackets) for fixing

RATINGS AND PART NUMBER REFERENCE

Un = 6000Vdc							
Part Number	Capacitance (µF)	Width (mm)	Height (mm)	R_S (mΩ)	Irms thermal 1 (A)	Irms thermal 2 (A)	Irms thermal 3 (A)
DKTFM1*#M0117	110	117	215	0,98	55	75	90
DKTFM2*#M0117	110	117	215	0,90	55	80	95
DKTFM1*#M1656	165	117	290	0,72	85	105	130
DKTFM2*#M1656	165	117	290	0,64	85	110	135
DKTFM3*#M0187	180	165	215	1,39	70	85	100
DKTFM4*#M0187	180	165	215	1,30	70	90	105
DKTFM1*#M0227	220	117	365	0,59	110	135	165
DKTFM2*#M0227	220	117	365	0,51	110	140	170
DKTFM3*#M0277	270	165	290	1,01	100	120	140
DKTFM4*#M0277	270	165	290	0,92	100	125	145
DKTFM1*#M2756	275	117	440	0,52	130	165	200
DKTFM2*#M2756	275	117	440	0,44	135	170	205
DKTFM1*#M0337	330	117	515	0,48	155	195	235
DKTFM2*#M0337	330	117	515	0,40	155	200	240
DKTFM3*#M3656	365	165	365	0,82	125	155	180
DKTFM4*#M3656	365	165	365	0,73	130	160	185
DKTFM1*#M3856	385	117	590	0,45	175	225	255
DKTFM2*#M3856	385	117	590	0,37	180	230	275
DKTFM3*#M4556	455	165	440	0,71	150	185	215
DKTFM4*#M4556	455	165	440	0,62	155	190	220
DKTFM1*#M4656	465	117	705	0,41	205	255	255
DKTFM2*#M4656	465	117	705	0,33	210	275	325
DKTFM3*#M5456	545	165	515	0,64	175	215	250
DKTFM4*#M5456	545	165	515	0,55	180	220	255
DKTFM1*#M0557	550	117	815	0,39	235	255	255
DKTFM2*#M0557	550	117	815	0,31	245	315	375
DKTFM3*#M6356	635	165	590	0,59	195	245	255
DKTFM4*#M6356	635	165	590	0,50	205	250	290
DKTFM3*#M7756	775	165	705	0,54	230	255	255
DKTFM4*#M7756	775	165	705	0,45	240	295	345
DKTFM3*#M0917	910	165	815	0,51	255	255	255
DKTFM4*#M0917	910	165	815	0,42	275	340	390

* Insert terminal type (**1, 2, 3** or **4**) # Insert **W** (without) or **M** (brackets) for fixing

CALCULATION FORM

Specification

Capacitance	C (µF)	
Working voltage	U_w (V)	
Rms current	I_{rms} (A_{rms})	
Frequency	f (Hz)	
Ripple voltage	U_r (V)	
Ambient temperature	θ_{amb} (°C)	
Lifetime @ V_w,I_{rms} and θ_{amb}	hours	
Parasitic inductance	L (nH)	
Cooling conditions		

Your Choice

PN		
Capacitance	C (µF)	
Rated voltage	U_n (V)	
Serial resistance	R_s (mΩ)	
Thermal resistance between hot spot and case	R_{th1} (°C/W)	
Thermal resistance between case and ambient air	R_{th2} (°C/W)	

Calculations

Maximum ripple voltage	U_{rmax}=0.45U_n	U_{rmax} = V

The maximum ripple voltage of the selected capacitor must be in any case higher than the ripple voltage of your application

Ratio Uw/Un	$\rho = U_w/U_n$	ρ =
Joule losses	$Pj = Rs \times I_{rms}^2$	P_j = W
Dielectric losses	$Pd = Q \times tg\delta_0 = Q \times 3.10^{-4}$	Pd = W
Hot spot temperature	$\theta_{HS} = \theta_{amb} + (P_j+P_d) \times (R_{th1}+R_{th2})$	θ_{HS} = °C

The hot spot temperature must be in any case lower than 85°C

LIFETIME EXPECTANCY VS HOT SPOT TEMPERATURE AND VOLTAGE

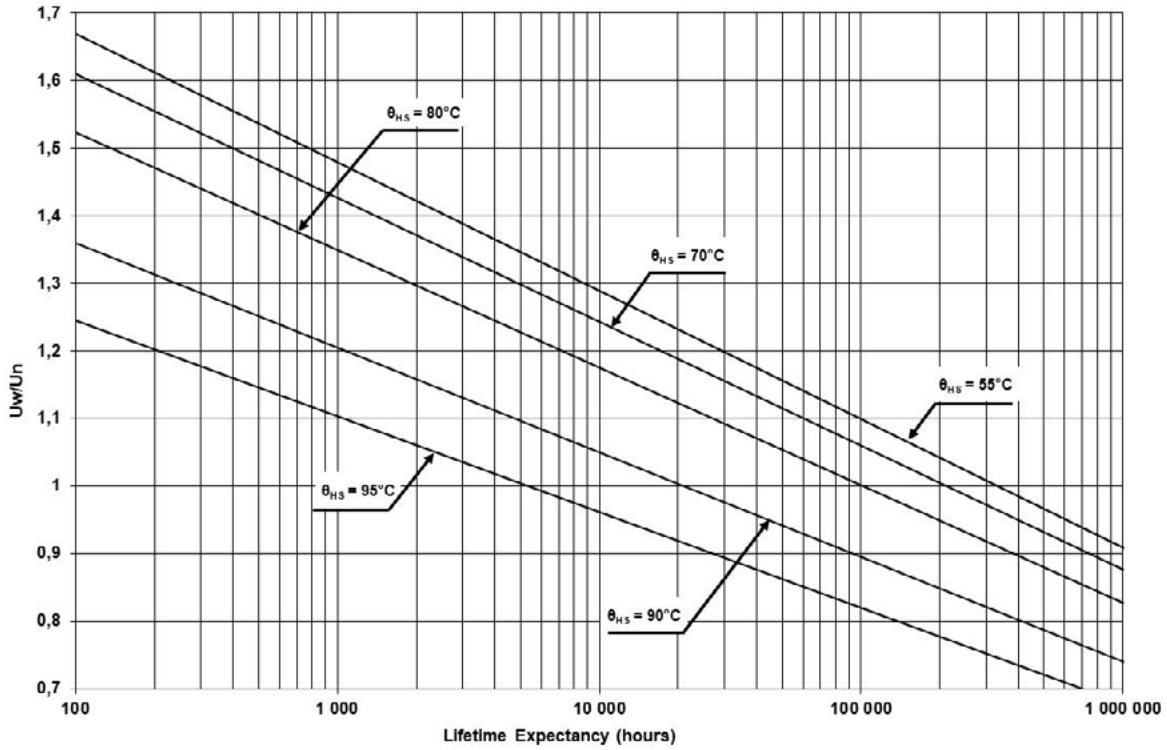

Expected lifetime at hot spot calculated and U = U_w	

TRAFIM PRODUCTS

1950Vdc to 6000Vdc

This questionnaire lists the information we require to prepare an offer according to your exact requirements

Company / Name / Email	Project / Quantity

Applications	DC Filtering		Discharge*		Protection*		Tuning
Capacitance (µF)							
Tolerance (%)							
Operating Voltage	Vpeak		Vch		Vpeak	Vdc	Vrms
Ripple Voltage (peak to peak)	V						
Working Frequency (Hz)							
Operating Current	Arms		Apeak		Arms		Arms
Maximum Current/Duration	Arms	s			Apeak		
Discharge			Aperiodic	Oscillatory			
Pulse Duration (5% Ipeak)							
Time to Ipeak (µs)							
Ringing Frequency (Hz)							
Reversal Voltage (%)							
Repetition Rate			shots/min/hour/day		Hz		
Hold Time @ Full Voltage (s)							
Fault Peak Current / nb shots	Apeak	shots	Apeak	shots			
Fault Reversal Voltage (%)							
Lifetime Expectancy	hours		shots		hours		hours
Maximum Inductance (nH)							
Test Voltage between Terminals (V)							
Test Voltage between Shorted Terminals and Case (V)							
Maximum Surge Voltage (MSV)							
MSV Duration / Frequency	s	/year			s	/year	

*Due to the particularities of varying waveforms in such application, more information on the exact nature of waveform is generally required for a full analysis.

Description			
Dimensions (mm) / Shape	**Operating Position**	**Terminals**	
Section: Height: rectangular, cylindrical	vertical, horizontal inclined, upside down	type	quantity

Thermal Characteristics					
Storage Temperature (°C)		**Operating Temperature (°C)**		**Cooling Method**	
min.		min.		Natural Convection	
average		average		Forced Air (m/s)	
max.		max.		Water	

Remarks

FILFIM PRODUCTS

6500Vdc to 56000Vdc

GENERAL DESCRIPTION

The FILFIM series is specifically designed for DC filtering applications for voltages up to 56000V.

Large case sizes up to 100 liters and high specific energy up to 250J/l together with safe and reliable ***Controlled Self Healing Technology*** make this series particularly suitable for power converters in energy and power transmission areas, active correction and high power DC supply.

The ***Controlled Self Healing Technology*** is based on a high temperature grade metallized film impregnated with vegetable oil allowing operating temperature up to 85°C.

Standard designs proposed in this catalogue are covering a wide range of voltage and capacitance values.

In case of specific requirements about shape and performances, feel free to contact your local KYOCERA AVX representative.

PACKAGING MATERIAL

non-painted
with or without fixing brackets
grounding via a nut on the top of the case
3 terminal sizes vs voltage
1 or 2 terminals

STANDARDS

IEC 61071:	Power electronic capacitors
IEC 60068-2:	Environmental testing

HOW TO ORDER

DK	IFM	1	B	M	B	0306
	Series	**Section and Option** 1 = 350x185 1 terminal 2 = 350x185 2 terminals 3 = 520x185 1 terminal 4 = 520x185 2 terminals 5 = 695x185 1 terminal 6 = 695x185 2 terminals	**Terminals Type** A, B or C See drawings	**Fixing** W = without M = brackets	**Voltage** A = 6500V B = 7900V C = 9000V D = 10500V E = 12000V F = 14500V G = 15800V H = 18000V I = 22000V J = 26000V K = 28000V L = 32000V M = 36000V N = 42000V O = 56000V	**Capacitance EIA code**

DEFINITIONS

C_n (µF)	capacitance	nominal value of the capacitance measured at θ_{amb} = 25ºC ± 10°C
U_n (V)	rated DC voltage	maximum operating peak voltage of either polarity (non-reversing type waveform), for which the capacitor has been designed for continuous operation
U_w (V)	working voltage	value of the maximum operating recurrent voltage for a given hot spot temperature and an expected lifetime
U_r (V)	ripple voltage	peak-to-peak alternating component of the unidirectional voltage
L_s (nH)	parasitic inductance	capacitor series self-inductance
R_s (mΩ)	series resistance	capacitor series resistance due to galvanic circuit
I_{rms} (A) **max** (A)	RMS current	Maximum rms current value @ 100Hz for continous operation
θ_{amb} (°C)	cooling air temperature	temperature of the cooling air measured at the hottest position of the capacitor, under steady-state conditions, midway between two units NOTE If only one unit is involved, it is the temperature measured at a point approximately 0.1 m away from the capacitor container and at two-thirds of the height from its base
θ_{HS} (°C)	hot spot temperature	highest temperature obtained inside the case of the capacitor in thermal equilibrium

CHARACTERISTICS

Capacitance range C_n	2.6µF to 612µF
Tolerance on C_n	±10%
Rated DC voltage U_n	6500 to 56000V (100kV on specific design)
Lifetime at U_n and 80°C hot-spot temperature and ΔC / C < 2%	100,000h
Parasitic inductance L_s	250nH to 830nH
Maximum rms current I_{rms}	up to 120A_{rms}
Test voltage between terminals @ 25°C	1.5 x Un for 10s
Test voltage between terminals and Case @ 25°C	1.5 x Un for 10s
Dielectric	Polypropylene
Climatic Category	55 / 85 / 56 (IEC 60068)
Working temperature	-55°C / +85°C (according to the power dissipated)
Storage temperature	-55°C / +85°C
Calorific value	30 MJ/kg

LIFETIME EXPECTANCY VS HOT SPOT TEMPERATURE AND VOLTAGE

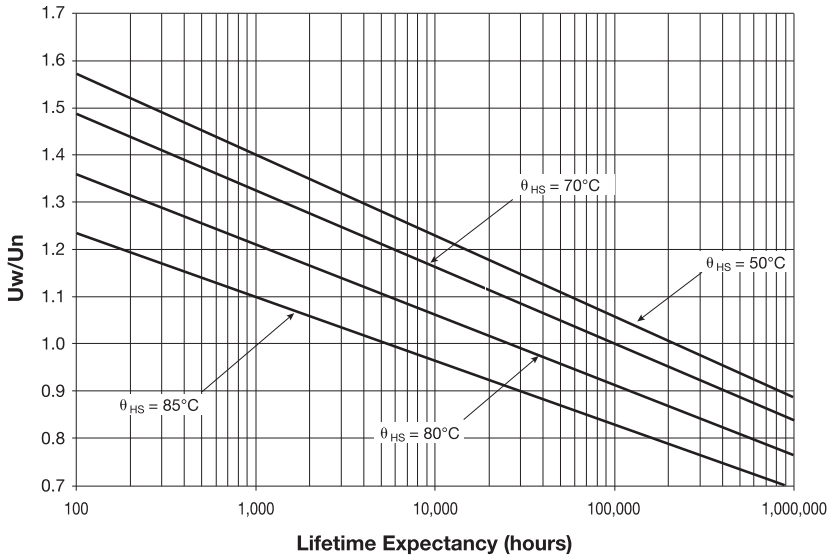

HOW TO CHOSE THE RIGHT CAPACITOR

The capacitor lifetime depends on the working voltage and the hot spot temperature.

Our caps are designed to meet 100,000 hours lifetime at rated voltage and 70°C hot spot temperature. In accordance with operating conditions, please calculate the hot spot temperature and deduce from this calculation if the obtained lifetime can suit the application.

1. From the tables, select a capacitor with required capacitance C_n and voltage U_n.

Calculate the maximum ripple voltage allowed for the selected cap:

$U_{rmax} = 0.2U_n$

If $U_r > U_{rmax}$, select a capacitor with higher rated voltage or contact your local sales representative

Make sure I_{rms} application < I_{rms} table

Copy out:

- serial resistance (R_s): see table of values
- thermal resistances R_{th1} and R_{th2}

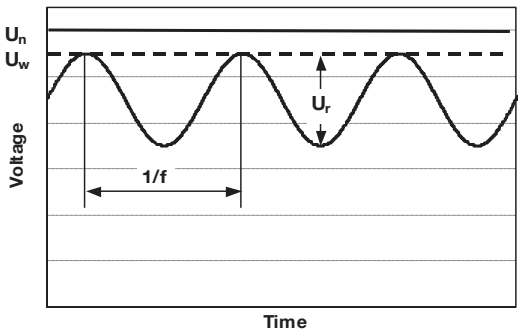

2. Hot spot temperature calculation

Total losses are calculated as follow: $P_t = P_j + P_d$

Joule losses: $P_j = R_s \times I_{rms^2}$

Dielectric losses: $P_d = Q \times tg\delta_0$ with

- Q(reactive power) = $\frac{I_{rms}^2}{C}$ for a sinusoidal waveform
- $tg\delta_0 = 3 \times 10^{-4}$ (dielectric losses of polypropylene + oil)

Hot spot temperature will be:

$\theta_{HS} = \theta_{amb} + (P_j + P_d) \times (R_{th1} + R_{th2})$

θ_{HS} ***absolute maximum is 85°C***

If temperature is higher than 85°C, come back to #1 and start again with another selection.

R_{th1}: thermal resistance between hot spot and case

R_{th2}: thermal resistance between case and ambient air

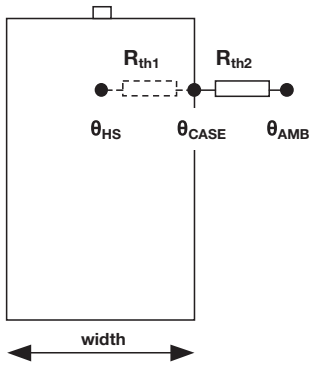

3. Refer to the curve and deduce the lifetime vs U_w/U_n ratio

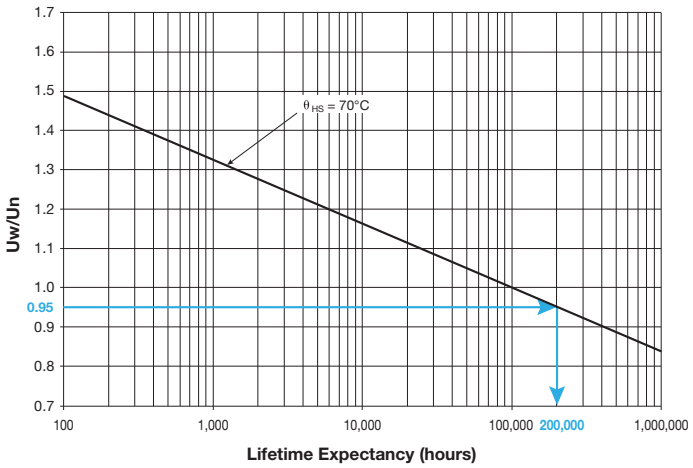

eg: rated voltage 12000V
working voltage 11400V
ρ = 0.95 ⇒ lifetime 200,000 hours
@ 70°C hot spot temperature

Please, find a calculation form at the end of the catalog

THERMAL RESISTANCES

R_{th1} (°C/W): Thermal resistance between hot spot and case
R_{th2} (°C/W): Thermal resistance between case and ambient air under natural convection and forced air

Height (mm)	R_{th1} (°C/W)			R_{th2} (°C/W)		
	Section (LxW)			Section (LxW)		
	350x185	520x185	695x185	350x185	520x185	695x185
315	0.2	0.15	0.115	0.2	0.15	0.115
410	0.16	0.12	0.095	0.16	0.12	0.095
500	0.14	0.1	0.08	0.14	0.1	0.08
595	0.12	0.085	0.07	0.12	0.085	0.07
685	0.1	0.075	0.06	0.1	0.075	0.06
770	0.09	0.07	0.055	0.09	0.07	0.055

For confined area, capacitor working in a closed cabinet, a thermal test under real conditions is necessary to evaluate the thermal resistance.

PARASITIC INDUCTANCE VS SIZE

Discharge method measurement

Ls (nH)= 0.332 x Height (mm) + $L_{terminal}$ x terminal qty

WEIGHT VS SIZE

Height (mm)	Weight (kg)		
	Section 350x185	Section 520x185	Section 695x185
315	29	41	54
410	36	52	68
500	43	62	81
595	50	72	95
685	57	82	108
770	63	91	119

MTBF CALCULATION

The failure rate λ_B depends on hot spot temperature θ_{HS} and charge ratio ρ.

$\rho = U_w/U_n$

$$\lambda_B = 3\times10^{5,738(\rho-1)}\times e^{\left(3,933\left(\frac{\theta_{HS}+273}{368}\right)^{27,75}\right)}\times10^{-9} \quad \text{in failures/hour}$$

GENERAL FAILURE RATE

$\lambda=\lambda_B$ x π_Q x π_B x π_E failures/hour • π_Q, π_B and π_E see following tables

Qualification	Qualification factor πQ
Product qualified on IEC61071 or IEC61881 and internal qualification	1
Product qualified on IEC61071 or IEC61881	2
Product answering on another norm	5
Product without qualification	15

Environment	Environment factor πE
On ground (good conditions)	1
On ground (fixed materials)	2
On ground (on board)	4
On ship	9
On plane	15

Environment	Environment factor πB
Favorable	1
Unfavourable	5

MEAN TIME BETWEEN FAILURE (MTBF)

MTBF = 1/λ hours

SURVIVAL FUNCTION

$N = N_0$ x exp (-λt)

N is the number of pieces still working after t hours.

N_0 is the number of pieces at the origin (t = 0)

FAILURE MODE

Main failure mode due to KYOCERA AVX's Controlled Self-Healing Technology is only losses of capacitance. Thanks to the Controlled Self-Healing Technology, the efficient solution to interrupt the self-healing process and prevent the avalanche effect leading to the worse sequence of events for non-controlled self-healing capacitors: polypropylene molecular cracking, gas emission and potential explosion in confined box.

DIMENSIONS

1 TERMINAL

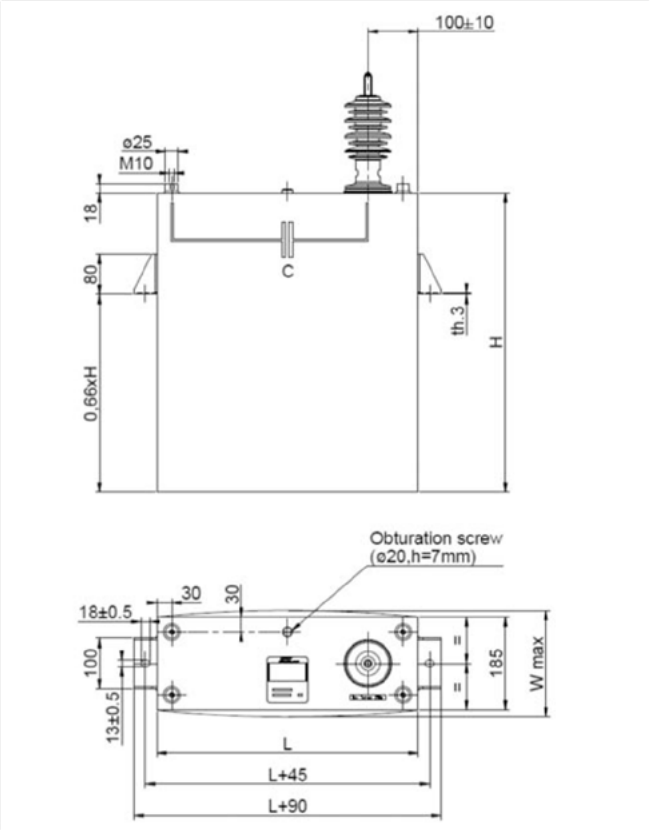

2 TERMINALS

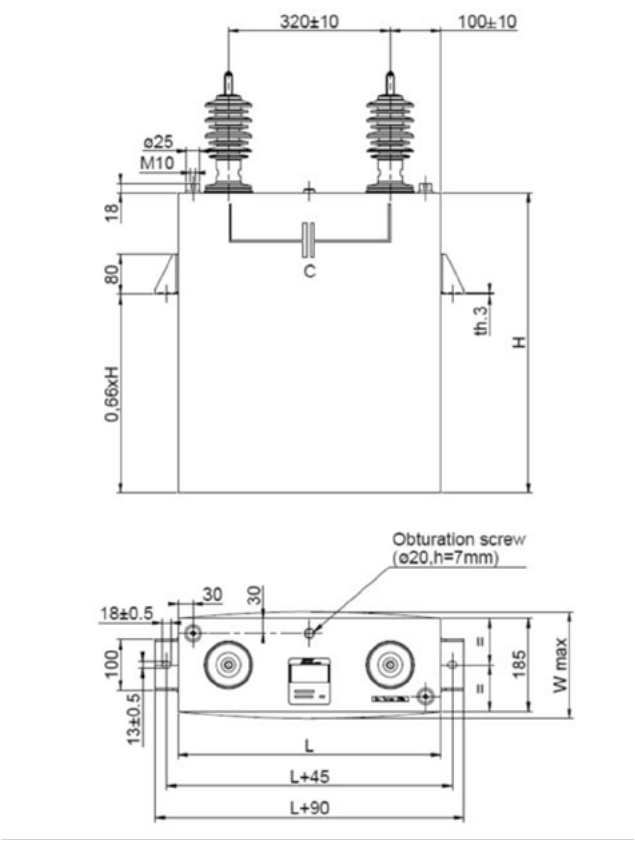

L	≥520mm	<520mm
Wmax	215mm	205mm

TERMINALS

Type A Un≤16kV
L=140nH
max torque 25Nm

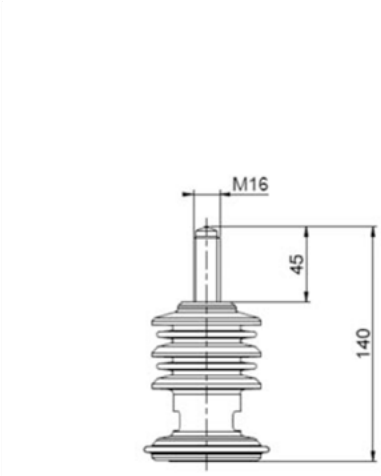

Type B 16kV<Un≤32kV
L=240nH
max torque 25Nm

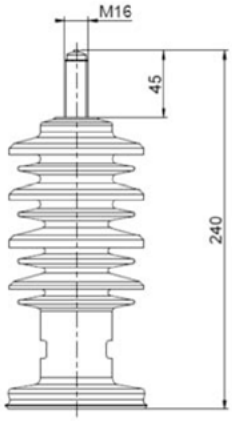

Type C 32kV<Un≤56kV
L=285nH
max torque 25Nm

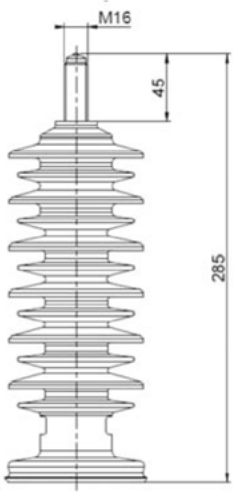

RATINGS AND PART NUMBER REFERENCE

Part Number	Capacitance (µF)	Height (mm)	R_S (mΩ)	I_{rms} max (A)
Un = 6500Vdc	**Terminal type A Section 350x185 (LxW)**			
DLIFM*A#A1886	188	315	3.4	90
DLIFM*A#A2756	275	410	3.3	110
DLIFM*A#A3626	362	500	3.2	120
DLIFM*A#A0457	450	595	3.2	120
DLIFM*A#A5376	537	685	3.1	120
DLIFM*A#A6126	612	770	3.1	120
Un = 7900Vdc	**Terminal type A Section 350x185 (LxW)**			
DLIFM*A#B1266	126	315	3.6	81
DLIFM*A#B1846	184	410	3.4	100
DLIFM*A#B2426	242	500	3.3	115
DLIFM*A#B0307	300	595	3.2	120
DLIFM*A#B3596	359	685	3.2	120
DLIFM*A#B0417	410	770	3.2	120
Un = 9000Vdc	**Terminal type A Section 350x185 (LxW)**			
DLIFM*A#C0956	95	315	3.7	72
DLIFM*A#C1386	138	410	3.4	95
DLIFM*A#C1816	181	500	3.3	110
DLIFM*A#C2256	225	595	3.3	120
DLIFM*A#C2696	269	685	3.2	120
DLIFM*A#C3076	307	770	3.2	120
Un = 10500Vdc	**Terminal type A Section 350x185 (LxW)**			
DLIFM*A#D0736	73	315	5.8	63
DLIFM*A#D1076	107	410	5	80
DLIFM*A#D0147	140	500	4.6	96
DLIFM*A#D1746	174	595	4.4	110
DLIFM*A#D2086	208	685	4.3	120
DLIFM*A#D2376	237	770	4.3	120
Un = 12000Vdc	**Terminal type A Section 350x185 (LxW)**			
DLIFM*A#E0556	55	315	6.2	56
DLIFM*A#E0806	80	410	5.3	74
DLIFM*A#E1056	105	500	4.9	88
DLIFM*A#E0137	130	595	4.6	102
DLIFM*A#E1556	155	685	4.5	114
DLIFM*A#E1776	177	770	4.4	120
Un = 14500Vdc	**Terminal type A Section 350x185 (LxW)**			
DLIFM*A#F3755	37.5	315	5.6	45
DLIFM*A#F0556	55	410	4.9	67
DLIFM*A#F0726	72	500	4.6	81
DLIFM*A#F0896	89	595	4.4	94
DLIFM*A#F1066	106	685	4.3	106
DLIFM*A#F1216	121	770	4.2	115
Un = 15800Vdc	**Terminal type A Section 350x185 (LxW)**			
DLIFM*A#G3155	31.5	315	5.9	41
DLIFM*A#G0466	46	410	5.1	61
DLIFM*A#G6055	60.5	500	4.7	76
DLIFM*A#G0756	75	595	4.5	89
DLIFM*A#G0896	89	685	4.4	100
DLIFM*A#G1026	102	770	4.3	110
Un = 18000Vdc	**Terminal type B Section 350x185 (LxW)**			
DLIFM*B#H1955	19.5	315	7.8	29
DLIFM*B#H0306	30	410	6.5	45
DLIFM*B#H0456	45	500	5.9	67
DLIFM*B#H0516	51	595	5.6	76
DLIFM*B#H0626	62	685	5.4	86
DLIFM*B#H0726	72	770	5.3	96

Part Number	Capacitance (µF)	Height (mm)	R_S (mΩ)	I_{rms} max (A)
Un = 22000Vdc	**Terminal type B Section 520x185 (LxW)**			
DLIFM*B#I0206	20	315	8.9	36
DLIFM*B#I3155	31.5	410	7.2	52
DLIFM*B#I4255	42.5	500	6.6	64
DLIFM*B#I0546	54	595	6.2	76
DLIFM*B#I0656	65	685	6	86
DLIFM*B#I0756	75	770	5.9	94
Un = 26000Vdc	**Terminal type B Section 520x185 (LxW)**			
DLIFM*B#J1425	14.2	315	9.8	30
DLIFM*B#J2255	22.5	410	7.8	46
DLIFM*B#J0306	30	500	7	57
DLIFM*B#J0386	38	595	6.6	67
DLIFM*B#J0466	46	685	6.3	77
DLIFM*B#J0536	53	770	6.2	85
Un = 28000Vdc	**Terminal type B Section 350x185 (LxW)**			
DLIFM*B#K0585	5.8	315	6.8	14
DLIFM*B#K0905	9	410	5.9	22
DLIFM*B#K0126	12	500	5.5	30
DLIFM*B#K1555	15.5	595	5.2	39
DLIFM*B#K1835	18.3	685	5.1	46
DLIFM*B#K2155	21.5	770	5.1	54
Un = 32000Vdc	**Terminal type B Section 695x185 (LxW)**			
DLIFM*B#L1285	12.8	315	11.2	32
DLIFM*B#L0206	20	410	8.8	43
DLIFM*B#L0276	27	500	7.9	54
DLIFM*B#L0346	34	595	7.4	63
DLIFM*B#L0416	41	685	7.1	73
DLIFM*B#L0476	47	770	6.9	80
Un = 36000Vdc	**Terminal type C Section 695x185 (LxW)**			
DLIFM*C#M0905	9	315	13.5	27
DLIFM*C#M1425	14.2	410	10.5	37
DLIFM*C#M1935	19.3	500	9.3	46
DLIFM*C#M2485	24.8	595	8.6	56
DLIFM*C#M0306	30	685	8.2	64
DLIFM*C#IM3555	35.5	770	7.9	72
Un = 42000Vdc	**Terminal type C Section 520x185 (LxW)**			
DLIFM*C#N0355	3.5	315	10	13
DLIFM*C#N0565	5.6	410	8	21
DLIFM*C#N0775	7.7	500	7.2	29
DLIFM*C#N0985	9.8	595	6.9	37
DLIFM*C#N0126	12	685	6.7	45
DLIFM*C#N0146	14	770	6.6	52
Un = 56000Vdc	**Terminal type C Section 695x185 (LxW)**			
DLIFM*C#O0265	2.6	315	11.6	13
DLIFM*C#O0425	4.2	410	9.2	21
DLIFM*C#O0575	5.7	500	8.3	28
DLIFM*C#O0735	7.3	595	7.8	34
DLIFM*C#O0885	8.8	685	7.5	40
DLIFM*C#O1035	10.3	770	7.4	45

* Section 350x185: Insert section and option (1 or 2)
* Section 520x185: Insert section and option (3 or 4)
* Section 695x185: Insert section and option (5 or 6)
# Insert **W** (without) or **M** (brackets) for fixing

CALCULATION FORM

Specification

Capacitance	C (µF)	
Working voltage	U_w (V)	
Rms current	I_{rms} (A_{rms})	
Frequency	f (Hz)	
Ripple voltage	U_r (V)	
Ambient temperature	θ_{amb} (°C)	
Lifetime @ V_w,I_{rms} and θ_{amb}	hours	
Parasitic inductance	L (nH)	
Cooling conditions		

Your Choice

PN		
Capacitance	C (µF)	
Rated voltage	U_n (V)	
Serial resistance	R_s (mΩ)	
Thermal resistance between hot spot and case	R_{th1} (°C/W)	
Thermal resistance between case and ambient air	R_{th2} (°C/W)	

Calculations

Maximum ripple voltage	U_{rmax}=0.45U_n	U_{rmax} = V

The maximum ripple voltage of the selected capacitor must be in any case higher than the ripple voltage of your application

Ratio Uw/Un	$\rho = U_w/U_n$	ρ =
Joule losses	$Pj = Rs \times I_{rms}^2$	P_j = W
Dielectric losses	$Pd = Q \times tg\delta_0 = Q \times 3.10^{-4}$	Pd = W
Hot spot temperature	$\theta_{HS} = \theta_{amb} + (P_j+P_d) \times (R_{th1}+R_{th2})$	θ_{HS} = °C

The hot spot temperature must be in any case lower than 85°C

LIFETIME EXPECTANCY VS HOT SPOT TEMPERATURE AND VOLTAGE

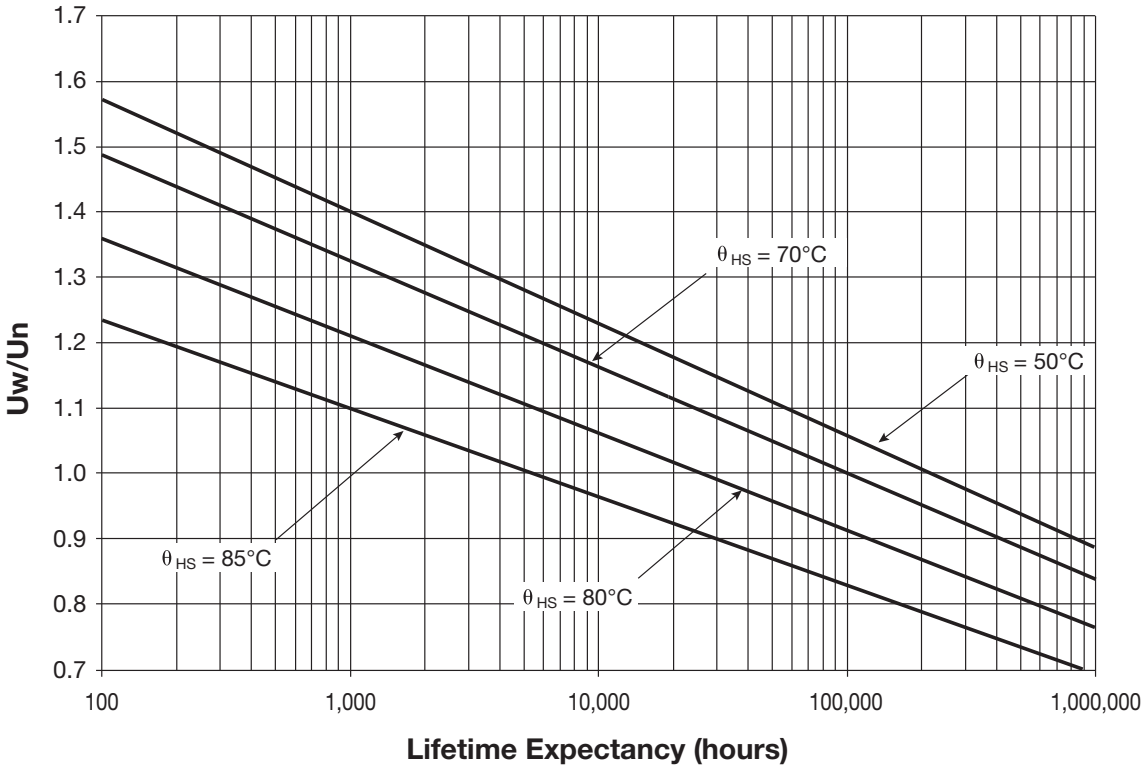

Expected lifetime at hot spot calculated and U = U_w	

FILFIM PRODUCTS

FILFIM 6500Vdc to 56000Vdc

This questionnaire lists the information we require to prepare an offer according to your exact requirements

Company / Name / Email	Project / Quantity

Applications	DC Filtering		Discharge*		Protection*		Tuning
Capacitance (µF)							
Tolerance (%)							
Operating Voltage	Vpeak		Vch		Vpeak	Vdc	Vrms
Ripple Voltage (peak to peak)	V						
Working Frequency (Hz)							
Operating Current	Arms		Apeak		Arms		Arms
Maximum Current/Duration	Arms	s			Apeak		
Discharge			Aperiodic	Oscillatory			
Pulse Duration (5% Ipeak)							
Time to Ipeak (µs)							
Ringing Frequency (Hz)							
Reversal Voltage (%)							
Repetition Rate			shots/min/hour/day		Hz		
Hold Time @ Full Voltage (s)							
Fault Peak Current / nb shots	Apeak	shots	Apeak	shots			
Fault Reversal Voltage (%)							
Lifetime Expectancy	hours		shots		hours		hours
Maximum Inductance (nH)							
Test Voltage between Terminals (V)							
Test Voltage between Shorted Terminals and Case (V)							
Maximum Surge Voltage (MSV)							
MSV Duration / Frequency	s	/year			s	/year	

*Due to the particularities of varying waveforms in such application, more information on the exact nature of waveform is generally required for a full analysis.

Description			
Dimensions (mm) / Shape	**Operating Position**	**Terminals**	
Section: Height:	vertical, horizontal inclined, upside down	type	quantity
rectangular, cylindrical			

Thermal Characteristics					
Storage Temperature (°C)		**Operating Temperature (°C)**		**Cooling Method**	
min.		min.		Natural Convection	
average		average		Forced Air (m/s)	
max.		max.		Water	

Remarks

FOLLOW US:

VISIT US AT WWW.KYOCERA-AVX.COM

North America
Tel: +1 864-967-2150

Europe
Tel: +44 1276-697000

Asia
Tel: +65 6286-7555

Central America
Tel: +55 11-46881960

Japan
Tel: +81 740-321250